The product using material and processing must conform to the "WL-PZ-001"HSF technical standard control requirements

RoHS

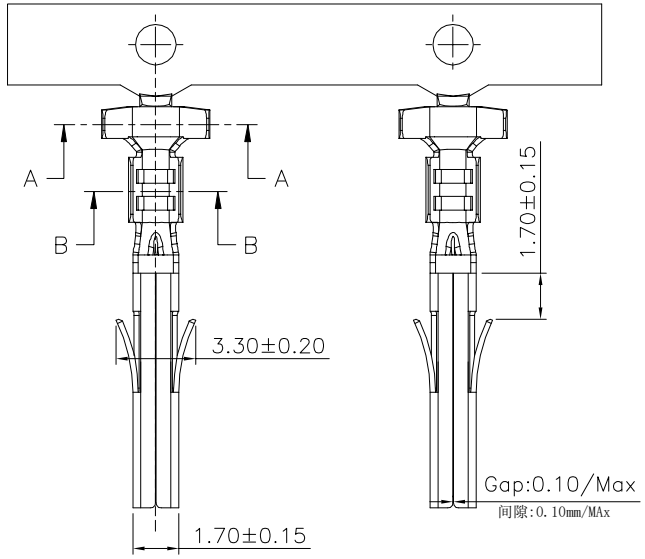

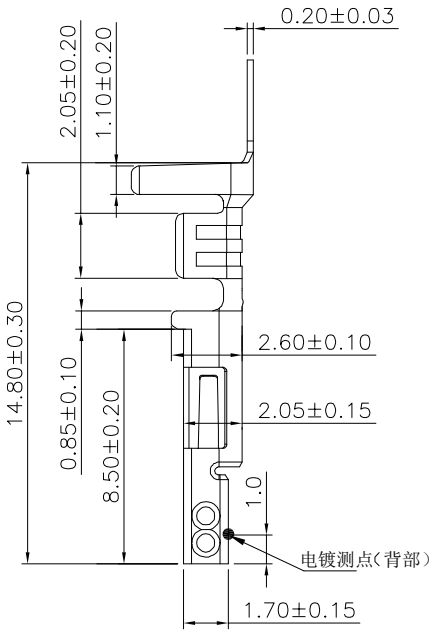

NOTE:
1.MATERIAL SPECIFICATION:
1-1.CONTACTS: SEE P/N
2.PLATING SPECIFICATION:
2-1.CONTACTS:
TIN/GOLD PLATED OVER ALL.
3.MECHANICAL PERFORMANCE:
3-1.RETENTIVITY FORCE: 2.5KGF/pin min
3-2.DURABILITY: 30 CYCLES.
4.ELECTRICAL PERFORMANCE:
4-1.RATED VOLTAGE : 250V AC/DC
4-2.CONTACT RESISTANCE: 10 mΩ MAX
4-3.INSULATION RESISTANCE: 1000MΩ Min
4-4.DIELECTRIC WITHSTANDING : 1500V
5.ENVIRONMENTAL PERFORMANCE:
5-1.OPERATING TEMPERATURE: -25°C~+85°C.
6.PACKAGE SPEC: REEL
7.P/N:

C4201 T 2 F X-X

SERIES NO: C4201
CONNECTOR: T-TERMINAL
TYPE CODE:2
MALE FEMALE: F-FEMALE, M-MALE
METAL: P-PHOSPHOR BRONZE, B-BRASS, H-High conductivity copper
PLATING: 1-G/F, A-ALL AU G/F, C-BRIGHE TIN, D-MATTE TIN

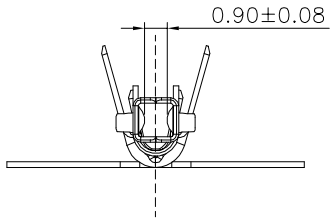

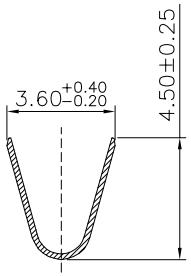

SEC:A-A

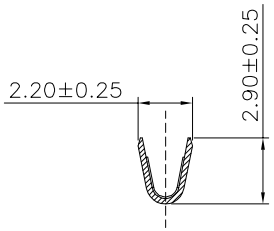

SEC:B-B

Orderinc Information & Specifications

Wire Range	Insulation O.D.	Qty/reel
AWG#16-#20	3.10mm(max)	5,000pcs

额定电流 Rated Current(Max)				
线规 \ PIN数	2-3	4-6	7-10	12-24
16AWG	9A	8A	7A	6A
18AWG	9A	8A	7A	6A
20AWG	7A	6A	5A	5A
22AWG	5A	4A	4A	4A
24AWG	4A	3A	3A	3A
26AWG	3A	2A	2A	2A
28AWG	2A	1A	1A	1A

REV.	REVISION RECORD	DATE
A0	NEW RELEASE	21.11.17

UNIT: mm
SIZE: A4

GENERAL TOLERANCES	
LINEAR	ANGLES
0.0±0.35	X°REF±6°
0.00±0.25	X°±3°
0.000±0.10	X°X' ±2°

SCALE: 1:1	NAME	DATE
APPROVED	Wang_jr	21.11.17
DESIGNER	Han_Gao	21.11.17
DRAWN	Zijun_Huang	21.11.17

PART.NO: C4201T2FX-X

DWG.NO: ENDE05

TITLE: Pitch 4.2mm Female 高脚 端子

万连科技 WanLian Teconology Co., Ltd

REV: A0 SHEET: 1/1