The product using material and processing must conform to the "WL-PZ-001"HSF technical standard control requirements

RoHS

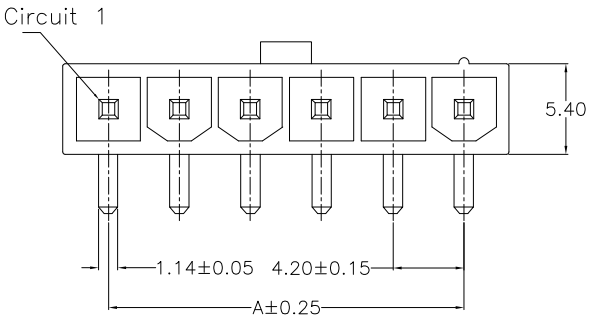

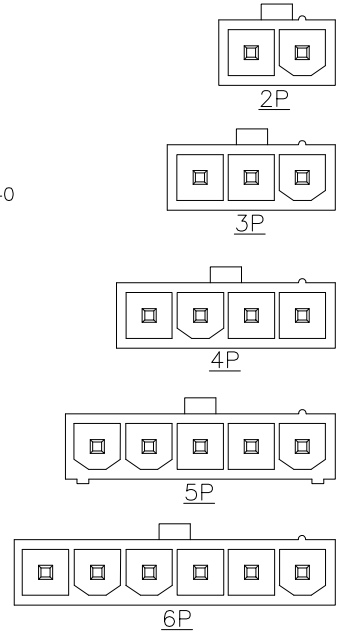

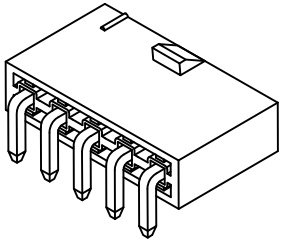

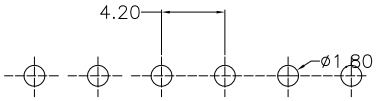

P.C.B LAYOUT

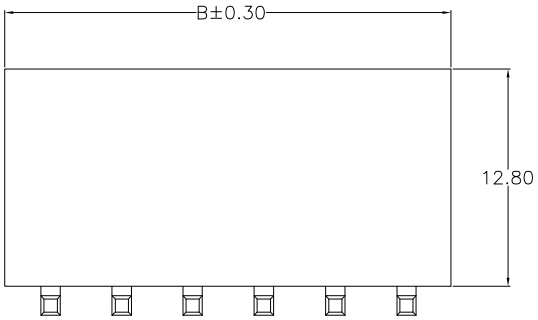

2~4PIN&6PIN

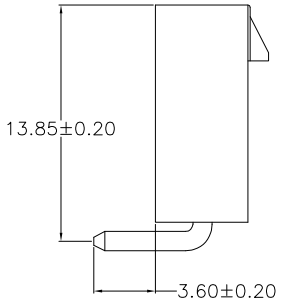

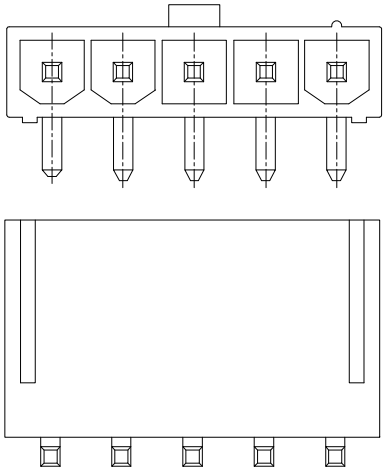

5PIN:有筋条

NOTE:
1.MATERIAL SPECIFICATION:
1-1.HOUSING: PA66
1-2.CONTACTS: BRASS
2.PLATING SPECIFICATION:
2-1.CONTACTS:
TIN/GOLD FLASH PLATED OVER ALL.
3.MECHANICAL PERFORMANCE:
3-1.INSERTION FORCE: 1.6kgf/PIN MAX
3-2.REMOVAL FORCE: 0.4kgf/PIN MIN
3-3.DURABILITY: 30 CYCLES.
4.ELECTRICAL PERFORMANCE:
4-1.CURRENT RATING: 9A
RATED VOLTAGE : 600V AC/DC
4-2.CONTACT RESISTANCE: 10 mΩ MAX
4-3.INSULATION RESISTANCE: 1000MΩ Min
4-4.DIELECTRIC WITHSTANDING : 1500V
5.ENVIRONMENTAL PERFORMANCE:
5-1.OPERATING TEMPERATURE: -25°C~+85°C.
6.PACKAGE SPEC: REEL
7.P/N:

C42011 F 9-1 XX 1 X X X

SERIES NO:
MALE FEMALE:
F-FEMALE
ANGLE:
0-180°
9-90°
ROW NO:
1-SINGLE ROW
PIN Q'PY:
02~06
TERMIPOINT:
1-DIP
WATER CODE
0-UL94V-0
2-UL94V-2
COLOR:
A-BLACK
K-WHITE
S-NATURE
PLATING:
A-ALL AU G/F
C-BRIGHE TIN
D-MATTE Tin

Poles	Dimensions (mm)	
	A	B
2	4.20	9.60
3	8.40	13.80
4	12.60	18.00
5	16.80	22.20
6	21.00	26.40

REV.	REVISION RECORD	DATE
A0	NEW RELEASE	21.11.17

UNIT: mm
SIZE: A4

GENERAL TOLERANCES	
LINEAR	ANGLES
0.0±0.35	X°REF±6°
0.00±0.25	X°±3°
0.000±0.10	X°X' ±2°

SCALE: 1:1	NAME	DATE
APPROVED	Wang_jr	21.11.17
DESIGNER	Han_Gao	21.11.17
DRAWN	Zijun_Huang	21.11.17

PART.NO: C42011F9-1XX1XXX

DWG.NO: ENDE05

TITLE: Pitch 4.2mm 单排 90° DIP Wafer

万连科技 WanLian Teconology Co., Ltd

REV: A0

SHEET: 1/2

The product using material and processing must conform to the "WL-PZ-001"HSF technical standard control requirements

RoHS

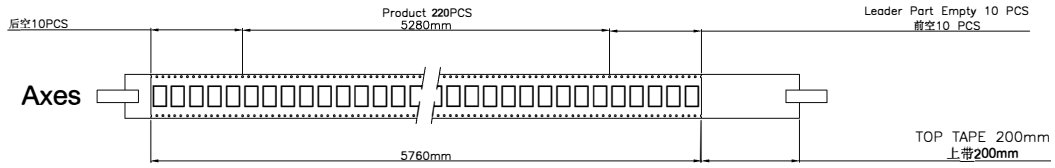

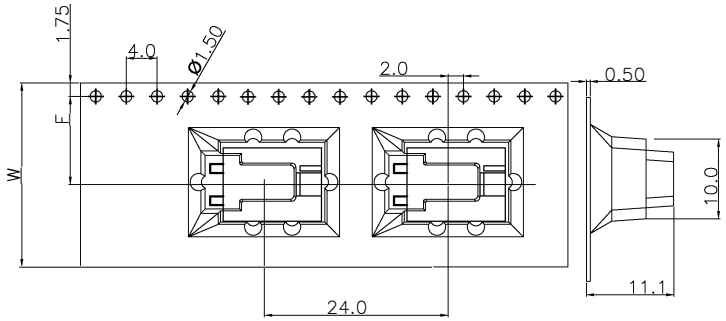

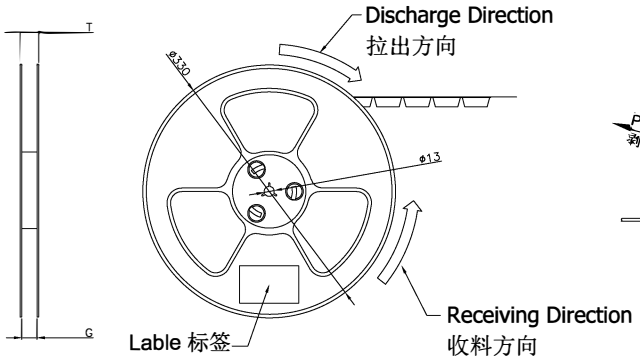

Single hole: None Hole Side
单孔：贴无链孔侧
Double hole: Elliptical Hole Side
双孔: 贴椭圆孔侧

COVER TAPE PEEL STRENGTH:20~120g
上带剥离力量：20~120g

速度 PEEL SPEED:300mm/minute

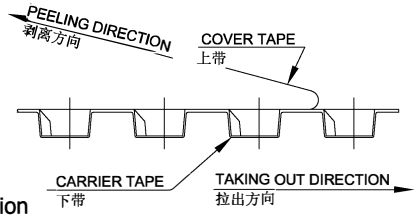

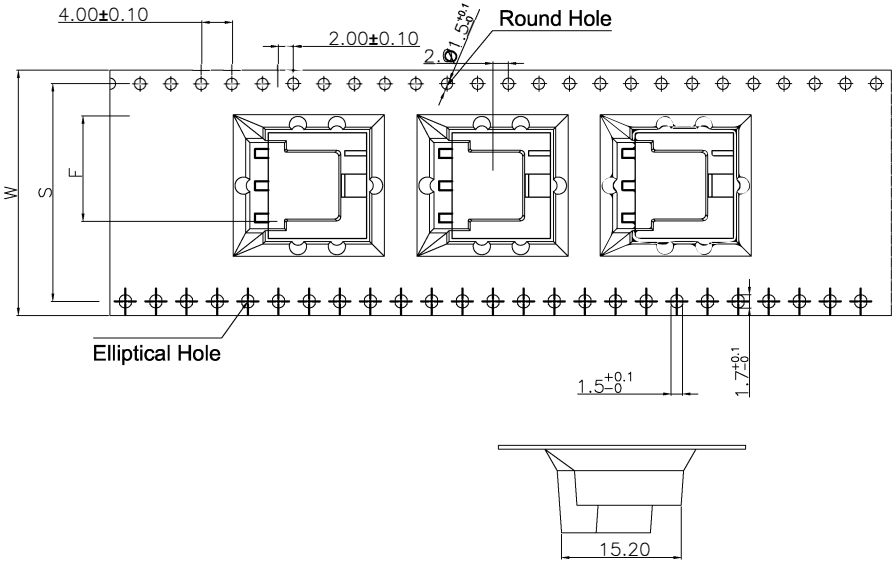

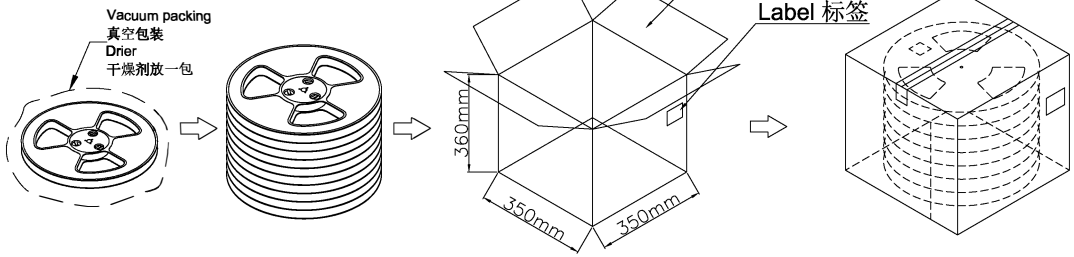

Note:

1. Carrier Camber Is Within 1mm In 100mm ; 带长100mm内容许弯曲度1mm
2. 10 Sprocket Hole Pitch Cumulative Tolerance±0.2MM ; 圆孔十个孔距离累计允许公差为±0.2mm
3. Carrier Tape Materaial for PS ; 下带材质为PS材质；Color颜色：Black黑色
4. bracer保护带：Color颜色:Black黑色;厚度0.40mm最小
5. Thinkess=0.50±0.05 ; 材料厚度为0.50±0.05mm
6. Cover Tape上带：冷风自粘带

Pin No.	W	S	F	T	G	Cover Tape(宽度) 上带(W)	Carrier Tape(Color) 下带(颜色)		REEL /PCS	CARTON /R	CARTON /PCS
WLA420F9-02	24	/	11.75	28.0	25.4	21.3	黑色		220	12	2400
WLA420F9-03	32	28.4	14.20	36.0	33.4	25.5			220	9	1980
WLA420F9-04 WLA420F9-05	44	40.4	20.20	48	44.4	37.5			220	7	1540
WLA420F9-06	56	52.4	26.20	60	56.4	49.5			220	5	1100

REV.	REVISION RECORD	DATE
A0	NEW RELEASE	21.11.17

UNIT: mm
SIZE: A4

GENERAL TOLERANCES	
LINEAR	ANGLES
0.0±0.35	X°REF±6°
0.00±0.25	X°±3°
0.000±0.10	X°X' ±2°

SCALE: 1:1	NAME	DATE
APPROVED	Wang_jr	21.11.17
DESIGNER	Han_Gao	21.11.17
DRAWN	Zijun_Huang	21.11.17

PART.NO: C42011F9-1XX1XXX

DWG.NO: ENDE05

TITLE: 包装图

万连科技 WanLian Teconology Co., Ltd

REV: A0

SHEET: 2/2