The product using material and processing must conform to the "WL-PZ-001"HSF technical standard control requirements

RoHS

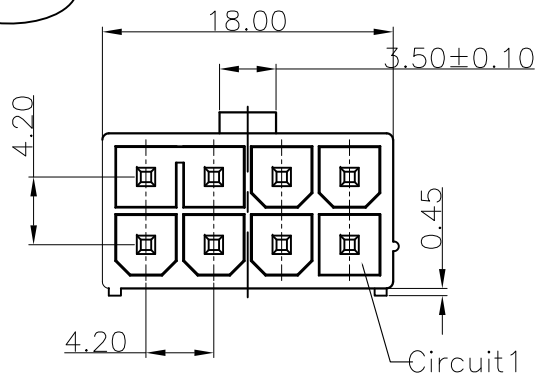

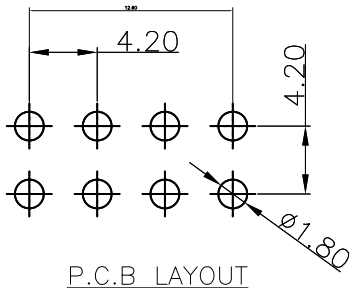

P.C.B LAYOUT

NOTE:
1.MATERIAL SPECIFICATION:
1-1.HOUSING: PA66
1-2.CONTACTS: BRASS
2.PLATING SPECIFICATION:
2-1.CONTACTS:
TIN/GOLD FLASH PLATED OVER ALL.
3.MECHANICAL PERFORMANCE:
3-1.INSERTION FORCE: 1.6kgf MAX
3-2.REMOVAL FORCE: 0.4kgf MIN
3-3.DURABILITY: 30 CYCLES.
4.ELECTRICAL PERFORMANCE:
4-1.CURRENT RATING: 9A AC/DC
RATED VOLTAGE : 600V AC/DC
4-2.CONTACT RESISTANCE: 10 mΩ MAX
4-3.INSULATION RESISTANCE: 1000MΩ Min
4-4.DIELECTRIC WITHSTANDING : 1500V
5.ENVIRONMENTAL PERFORMANCE:
5-1.OPERATING TEMPERATURE: -40°C~+105°C.
6.PACKAGE SPEC: PE BAG
7.P/N:

C42012 F 0-2 XX 1 X X X

SERIES NO:

MALE FEMALE:
F-FEMALE

ANGLE:
0-180°
9-90°

ROW NO:
2-DOUBLE ROW

PIN Q'PY:
16

TERMIPOINT:
1-DIP

WATER CODE
0-UL94V-0
2-UL94V-2

COLOR:
A-BLACK
K-WHITE
S-NATURE

PLATING:
A-ALL AU G/F
C-BRIGHE TIN
D-MATTE Tin

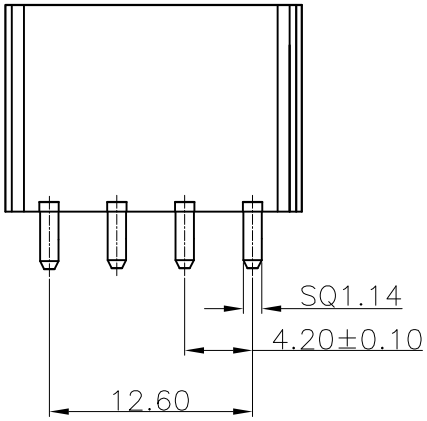

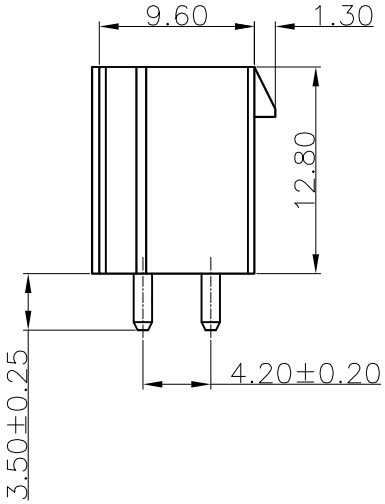

REV.	REVISION RECORD	DATE
A0	NEW RELEASE	21.11.17

GENERAL TOLERANCES	
LINEAR	ANGLES
0.0±0.35	X°REF±6°
0.00±0.25	X°±3°
0.000±0.10	X°X' ±2°

UNIT: mm
SIZE: A4

SCALE: 1:1	NAME	DATE
APPROVED	Wang_jr	21.11.17
DESIGNER	Han_Gao	21.11.17
DRAWN	Zijun_Huang	21.11.17

PART.NO: C42012F0-2XX1XXX

DWG.NO: ENDE05

TITLE: Pitch 4.2mm 双排 180° DIP Wafer 实心针 连PIN 特殊款

万连科技 WanLian Teconology Co., Ltd

REV: A0

SHEET: 1/1