The product using material and processing must conform to the "WL-PZ-001"HSF technical standard control requirements

RoHS

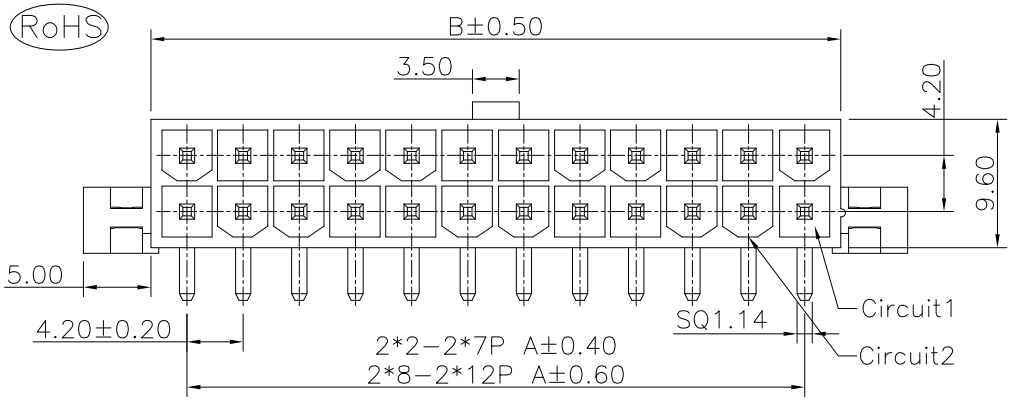

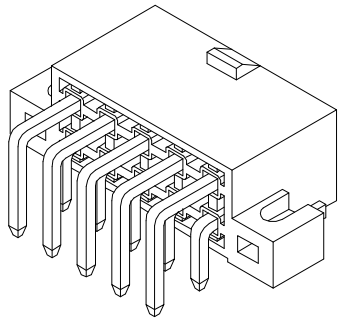

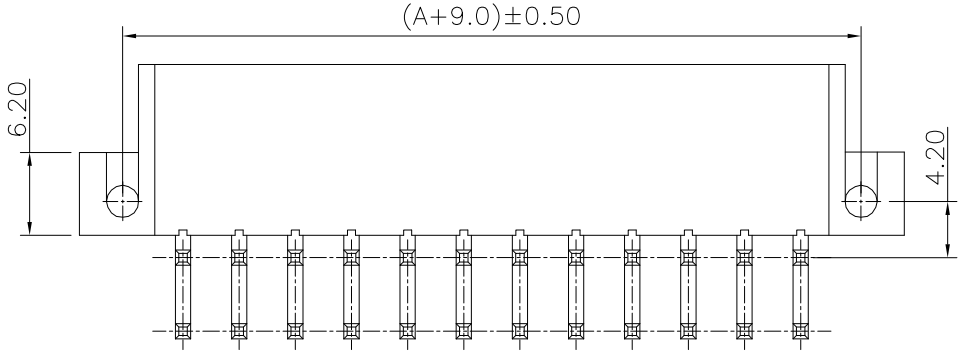

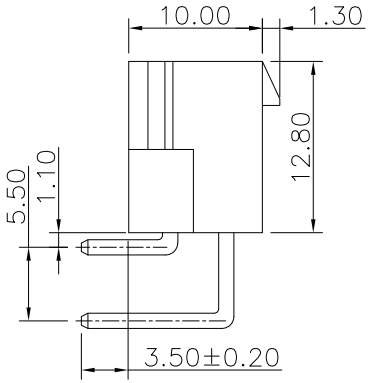

NOTE:
1.MATERIAL SPECIFICATION:
1-1.HOUSING: PA66,
1-2.CONTACTS: BRASS
2.PLATING SPECIFICATION:
2-1.CONTACTS:
TIN/GOLD FLASH PLATED OVER ALL.
3.MECHANICAL PERFORMANCE:
3-1.INSERTION FORCE: 1.6kgf/PIN MAX
3-2.REMOVAL FORCE: 0.4kgf/PIN MIN
3-3.DURABILITY: 30 CYCLES.
4.ELECTRICAL PERFORMANCE:
4-1.CURRENT RATING: 9A
RATED VOLTAGE : 600V AC/DC
4-2.CONTACT RESISTANCE: 10 mΩ MAX
4-3.INSULATION RESISTANCE: 1000MΩ Min
4-4.DIELECTRIC WITHSTANDING : 1500V
5.ENVIRONMENTAL PERFORMANCE:
5-1.OPERATING TEMPERATURE: -40°C~+105°C.
6.PACKAGE SPEC: TRAY
7.P/N:

C42014 F 9-2 XX 1 X X X

- SERIES NO: C42014
- MALE FEMALE: F-FEMALE
- ANGLE: 0-180°, 9-90°
- ROW NO: 2-DOUBLE ROW
- PIN Q'PY: 02~24
- TERMIPOINT: 1-DIP
- PLATING: A-ALL AU G/F, C-BRIGHE TIN, D-MATTE Tin
- COLOR: A-BLACK, K-WHITE, S-NATURE
- WATER CODE: 0-UL94V-0, 2-UL94V-2

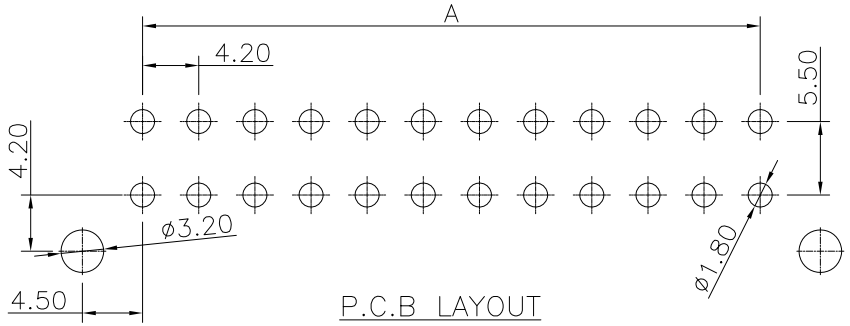

P.C.B LAYOUT

Ordering Information & Dimensions

Poles	Dimensions (mm) A	Dimensions (mm) B	Poles	Dimensions (mm) A	Dimensions (mm) B
02	---	5.40	14	25.20	30.60
04	4.20	9.60	16	29.40	34.80
06	8.40	13.80	18	33.60	39.00
08	12.60	18.00	20	37.80	43.20
10	16.80	22.20	22	42.00	47.40
12	21.00	26.40	24	46.20	51.60

REV.	REVISION RECORD	DATE
A0	NEW RELEASE	21.11.17

UNIT: mm
SIZE: A4

GENERAL TOLERANCES	
LINEAR	ANGLES
0.0±0.35	X°REF±6°
0.00±0.25	X°±3°
0.000±0.10	X°X' ±2°

SCALE: 1:1	NAME	DATE
APPROVED	Wang_jr	21.11.17
DESIGNER	Han_Gao	21.11.17
DRAWN	Zijun_Huang	21.11.17

PART.NO: C42014F9-2XX1XXX

DWG.NO: ENDE05

万连科技 WanLian Teconology Co., Ltd

TITLE: Pitch 4.2mm 双排 90° DIP Wafer 带螺丝孔 实心针

REV: A0

SHEET: 1/2

The product using material and processing must conform to the "WL-PZ-001"HSF technical standard control requirements

RoHS

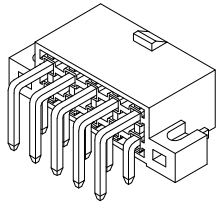

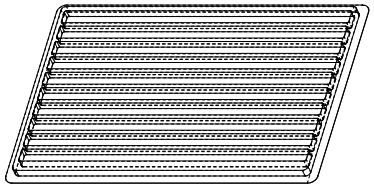

A

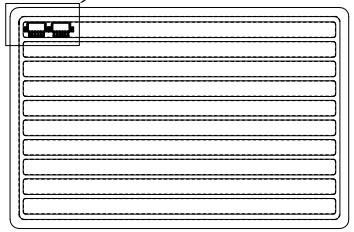

10Row XXX/Row=XXXPcs/Tray

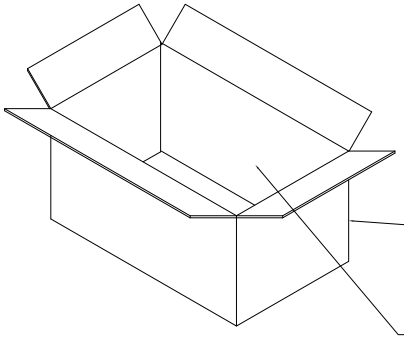

Material: K=K

17 Tray xXXXPcs=XXXXPcs /Box cartion

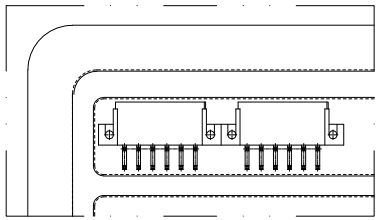

A
5:1

注意事项：
1.盒装产品四周需用订书针固定；袋装产品封口前需放1-2包干燥剂于内；卷装产品前后需留10-20PCS产品空格。
2. 内外包装均需有数量标签，尾数包装需用不影响品质之物品填充并注明尾数.
3. 纸箱规格：45.5*28.5*22.5CM
4. 每箱装17盘

1020	60	2X12P
1190	70	2X11P
1190	70	2X10P
1360	80	2X9P
1530	90	2X8P
1700	100	2X7P
1870	110	2X6P
2210	130	2X5P
2550	150	2X4P
2890	170	2X3P
		2X2P
PCS/Cartion	PCS/Tray	P0S

REV.	REVISION RECORD	DATE
A0	NEW RELEASE	21.11.17

GENERAL TOLERANCES	
LINEAR	ANGLES
0.0±0.35	X°REF±6°
0.00±0.25	X°±3°
0.000±0.10	X°X' ±2°

UNIT: mm
SIZE: A4

SCALE: 1:1	NAME	DATE
APPROVED	Wang_jr	21.11.17
DESIGNER	Han_Gao	21.11.17
DRAWN	Zijun_Huang	21.11.17

PART.NO: C42014F9-2XX1XXX

DWG.NO: ENDE05

TITLE: 包装方式

万连科技 WanLian Teconology Co., Ltd

REV: A0

SHEET: 2/2