The product using material and processing must conform to the "WI-PZ-001"HSF technical standard control requirements

RoHS+HF

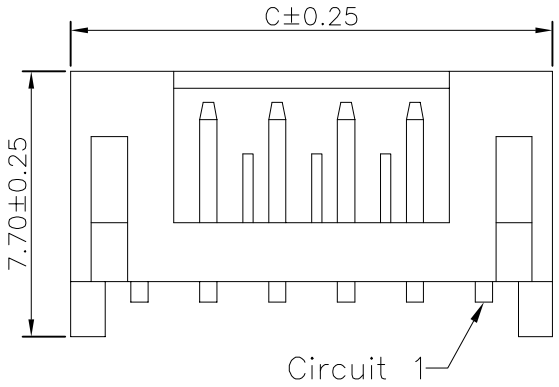

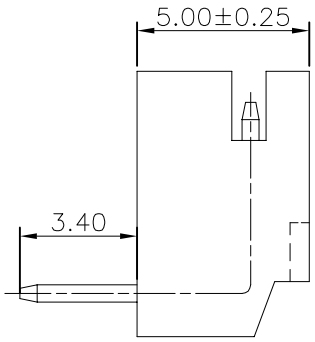

TYPE A

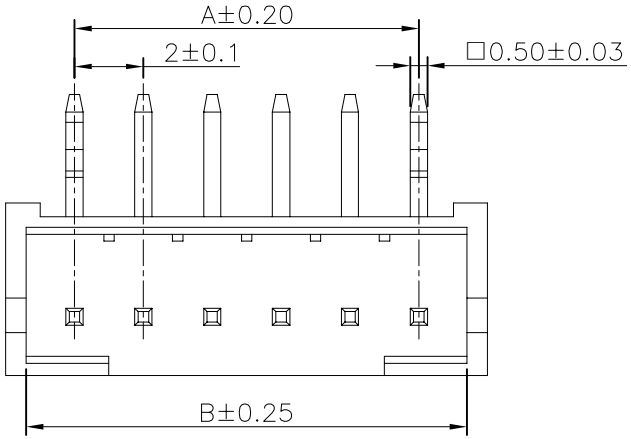

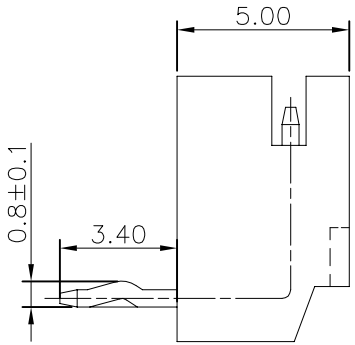

TYPE K

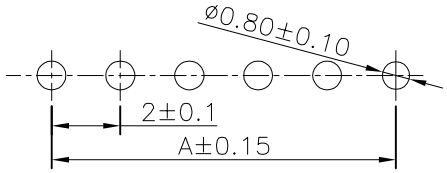

RECOMMENDED PCB Layout

DEFAULT TOLERANCES:±0.10(TOP VIEW)

NOTE:
1.MATERIAL SPECIFICATION:
  1-1.HOUSING: PA66 UL94V-0
  1-2.CONTACTS: BRASS
2.PLATING SPECIFICATION:
  2-1.CONTACTS:SN PLATED OVER ALL.
3.MECHANICAL PERFORMANCE:
  3-1.Retentivity Force: 1.2KGF/Pin Min
  3-2.DURABILITY: 30 CYCLES.
4.ELECTRICAL PERFORMANCE:
  4-1.CURRENT RATING: 2.0A
  4-2.VOLTAGE RATING: 100V MAX
  4-3.CONTACT RESISTANCE: 10mΩ Max.
  4-4.INSULATION RESISTANCE: 1000MΩ MIN
  4-5.WITHSTANDING VOLTAGE:800V ACMin
5.ENVIRONMENTAL PERFORMANCE:
  OPERATING TEMPERATURE: -25°C~+85°C.
6.PACKAGE SPEC:PE BAG
7.P/N: A20011 F 9-1 XX 1 X X X

SERIES NO:

MALE FEMALE:
F-FEMALE

ANGLE:
9-90°
0-180°

ROW NO:
1-SINGLE ROW

PIN Q'PY:
02~16

TYPE:
1-TYPE A
2-TYPE K

COLOR:
A-BLACK
K-WHITE
S-NATURE

PLATING:
A-ALL AU G/F
C-BRIGHT TIN
D-MATTE TIN

TERMIPOINT:
1-DIP

Circuit	Dimensions(mm)			Circuit	Dimensions(mm)		
	A	B	C		A	B	C
02	2.00	5.10	6.10	10	18.00	21.10	22.10
03	4.00	7.10	8.10	11	20.00	23.10	24.10
04	6.00	9.10	10.10	12	22.00	25.10	26.10
05	8.00	11.10	12.10	13	24.00	27.10	28.10
06	10.00	13.10	14.10	14	26.00	29.10	30.10
07	12.00	15.10	16.10	15	28.00	31.10	32.10
08	14.00	17.10	18.10	16	30.00	33.10	34.10
09	16.00	19.10	20.10				

REV.	REVISION RECORD	DATE
A0	NEW RELEASE	21.01.13

UNIT: mm

SIZE: A4

GENERAL TOLERANCES	
LINEAR	ANGLES
0.0±0.35	X°REF±6°
0.00±0.25	X°±3°
0.000±0.10	X°X' ±2°

SCALE: 1:1	NAME	DATE
APPROVED	Wang_jr	21.08.01
DESIGNER	Han_Gao	21.08.01
DRAWN	Zijun_Huang	21.08.01

PART.NO: A20011F9-1XX1XXX

DWG.NO: ENDE05

TITLE: 2.00mm Pitch 90°Wafer-DIP TYPE

万连科技 WanLian Technology Co., Ltd

REV: A0

SHEET: 1/1