The product using material and processing must conform to the "WI-PZ-001"HSF technical standard control requirements

RoHS+HF

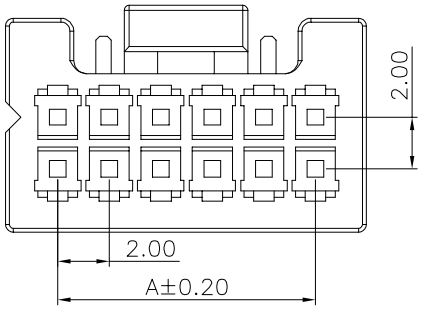

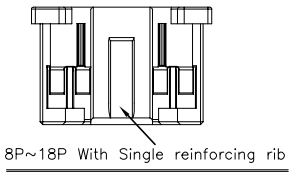

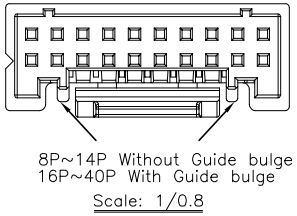

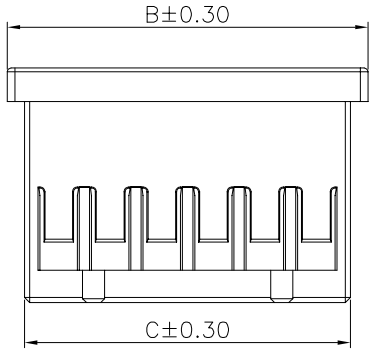

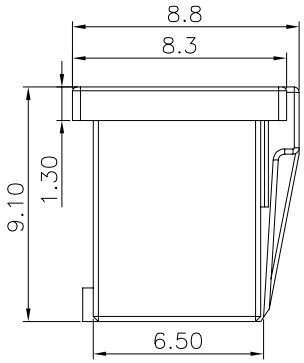

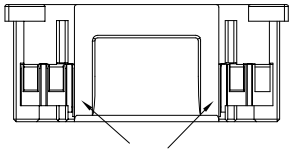

NOTE:
1.MATERIAL SPECIFICATION:
1-1.HOUSING: PA66,UL94V-0
2.MECHANICAL PERFORMANCE:
2-1.RETENTIVITY FORCE: 1.0KGF/pin min
2-2.DURABILITY: 30 CYCLES.
3.ELECTRICAL PERFORMANCE:
3-1.CURRENT RATING: 3A
RATED VOLTAGE : 250V AC/DC
3-2.CONTACT RESISTANCE: 10 mΩ MAX
3-3.INSULATION RESISTANCE: 1000MΩ Min
3-4.DIELECTRIC WITHSTANDING : 800V
4.ENVIRONMENTAL PERFORMANCE:
4-1.OPERATING TEMPERATURE: -25°C~+85°C.
5.PACKAGE SPEC: PE BAG
6.P/N:

A2020 H M-2 XX X 0

SERIES NO:
CONNECTOR: H-HOUSING
MALE FEMALE: M-MALE
ROW NO: 2-DOUBLE ROW
PIN Q'PY: 08~40
COLOR: A-BLACK K-WHITE S-NATURE

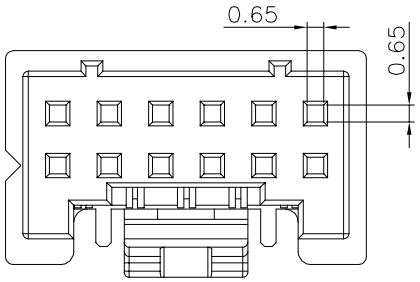

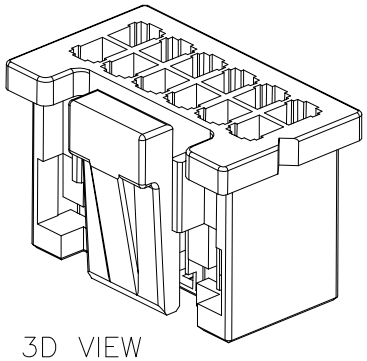

3D VIEW

Circuit	Dimensions(mm)			Circuit	Dimensions(mm)		
	A	B	C		A	B	C
2*04	6.00	10.00	8.65	2*13	24.00	28.00	26.65
2*05	8.00	12.00	10.65	2*14	26.00	30.00	28.65
2*06	10.00	14.00	12.65	2*15	28.00	32.00	30.65
2*07	12.00	16.00	14.65	2*16	30.00	34.00	32.65
2*08	14.00	18.00	16.65	2*17	32.00	36.00	34.65
2*09	16.00	20.00	18.65	2*18	34.00	38.00	36.65
2*10	18.00	22.00	20.65	2*19	36.00	40.00	38.65
2*11	20.00	24.00	22.65	2*20	38.00	42.00	40.65
2*12	22.00	26.00	24.65				

REV.	REVISION RECORD	DATE
A0	NEW RELEASE	21.10.12

UNIT: mm
SIZE: A4

GENERAL TOLERANCES	
LINEAR	ANGLES
0.0±0.35	X°REF±6°
0.00±0.25	X°±3°
0.000±0.10	X°X' ±2°

SCALE: 1:1	NAME	DATE
APPROVED	Wang_jr	21.10.12
DESIGNER	Han_Gao	21.10.12
DRAWN	Zijun_Huang	21.10.12

PART.NO: A2020HM-2XXX0

DWG.NO: ENDE05

TITLE: Pitch2.00mm PUD双排带扣Housing PA66无卤

万连科技 WanLian Technology Co., Ltd

REV: A0 SHEET: 1/1