The product using material and processing must conform to the "WI-PZ-001"HSF technical standard control requirements

RoHS

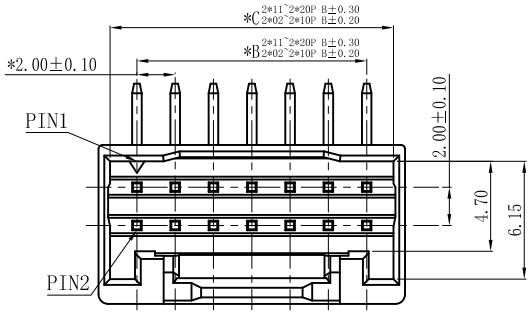

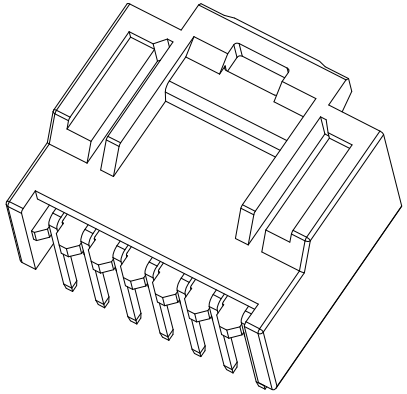

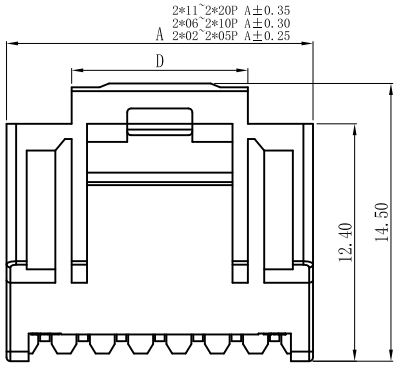

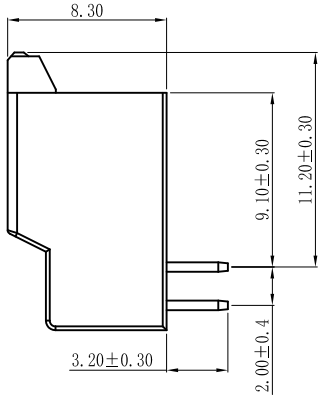

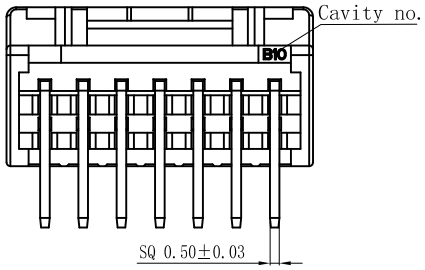

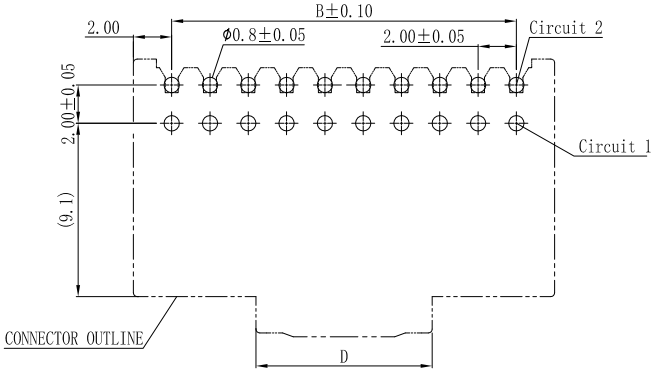

P.C.B LAYOUT

NOTE:

1.MATERIAL SPECIFICATION:
- 1-1.HOUSING: PA66/LCP,UL94V-0
- 1-2.CONTACTS: PHOSPHOR BRONZE

2.PLATING SPECIFICATION:
- 2-1.CONTACTS:
  TIN/GOLD FLASH PLATED OVER ALL.

3.MECHANICAL PERFORMANCE:
- 3-1.RETENTIVITY FORCE: 1.0KGF/pin min
- 3-2.DURABILITY: 30 CYCLES.

4.ELECTRICAL PERFORMANCE:
- 4-1.CURRENT RATING: 2A
  RATED VOLTAGE : 250V AC/DC
- 4-2.CONTACT RESISTANCE: 20 mΩ MAX
- 4-3.INSULATION RESISTANCE: 1000MΩ Min
- 4-4.DIELECTRIC WITHSTANDING : 1000V

5.ENVIRONMENTAL PERFORMANCE:
- 5-1.OPERATING TEMPERATURE: -25°C~+85°C.

6.PACKAGE SPEC: PE BAG

7.P/N: A2036 F 9-2 XX 1 X X 0

- SERIES NO: A2036
- MALE FEMALE: F-FEMALE
- ANGLE: 9-90°
- ROW NO: 2-DOUBLE ROW
- PIN Q'PY: 04~40
- TERMIPOINT: 1-DIP
- PLATING: A-ALL AU G/F, C-BRIGHE TIN, D-MATTE Tin
- COLOR: A-BLACK, K-WHITE, S-NATURE

CKL	A	B	C	D	E	CKL	A	B	C	D	B
2*02	6	2	4.8	3.2	3.2	2*12	26	22	24.8		22.2
2*03	8	4	6.8	3.8	4.2	2*13	28	24	26.8		24.2
2*04	10	6	8.8	5.2	6.2	2*14	30	26	28.8		26.2
2*05	12	8	10.8	7.3	8.2	2*15	32	28	30.8	9.2	28.2
2*06	14	10	12.8		10.2	2*16	34	30	32.8		30.2
2*07	16	12	14.8		12.2	2*17	36	32	34.8		32.2
2*08	18	14	16.8		14.2	2*18	38	34	36.8		34.2
2*09	20	16	18.8	9.2	16.2	2*19	40	36	38.8		36.2
2*10	22	18	20.8		18.2	2*20	42	38	40.8		38.2
2*11	24	20	22.8		20.2						

REV.	REVISION RECORD	DATE
A0	NEW RELEASE	21.10.12

UNIT: mm
SIZE: A4

GENERAL TOLERANCES	
LINEAR	ANGLES
0.0±0.35	X°REF±6°
0.00±0.25	X°±3°
0.000±0.10	X°X' ±2°

SCALE: 1:1	NAME	DATE
APPROVED	Wang_jr	21.10.12
DESIGNER	Han_Gao	21.10.12
DRAWN	Zijun_Huang	21.10.12

PART.NO: A2036F9-2XX1XX0

DWG.NO: ENDE05

TITLE: Pitch2.00mm MX90° 双排带扣卧插无logo Wafer

万连科技 WanLian Teconology Co., Ltd

REV: A0 SHEET: 1/2