The product using material and processing must conform to the "WI-PZ-001"HSF technical standard control requirements

ROHS+HF

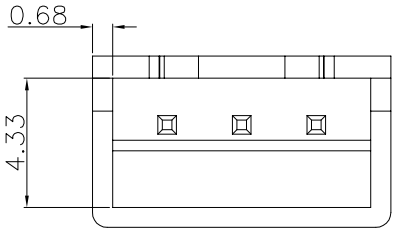

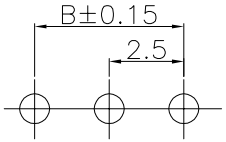

PCB Layout

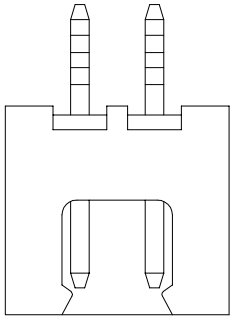

2P

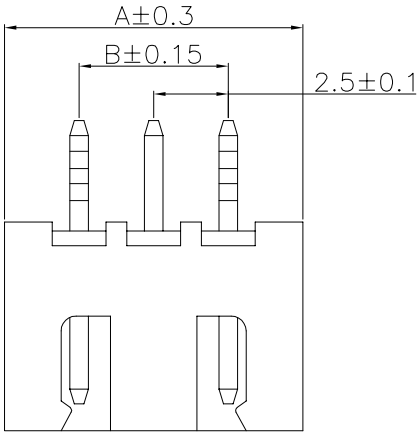

3P-16P

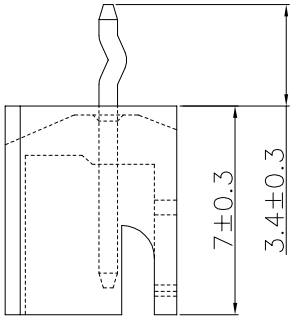

PLAY K

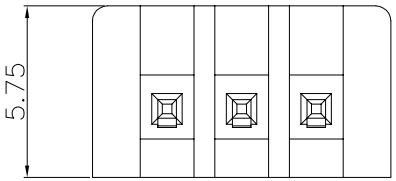

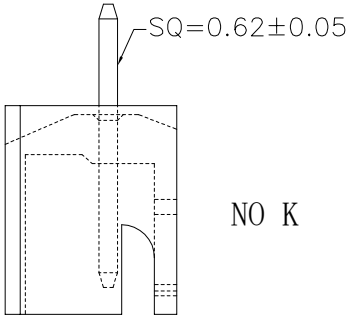

NO K

NOTE:
1.MATERIAL SPECIFICATION:
1-1.HOUSING: PA66 UL94V-0 WHITE
1-2.CONTACTS: BRASS
2.PLATING SPECIFICATION:
2-1.CONTACTS:
SN PLATED OVER ALL.
3.MECHANICAL PERFORMANCE:
3-1.RETENTION FORCE: 2.0KGF/MIN
3-2.DURABILITY: 50 CYCLES.
4.ELECTRICAL PERFORMANCE:
4-1.CURRENT RATING: 3.0A
4-2.VOLTAGE RATING: 250V MAX
4-3.CONTACT RESISTANCE: 10mΩ Max.
4-4.INSULATION RESISTANCE: 1000MΩ MIN
4-5.DIELECTRIC WITHSTANDING: 1000V AC Min
5.ENVIRONMENTAL PERFORMANCE:
OPERATING TEMPERATURE: -25°C~+85°C.
6.PACKAGE SPEC: PE BAG
7.P/N ORDER:

A2501 F 0-1 XX 1 X X X

- SERIES NO: A2501
- MALE FEMALE: F-FEMALE
- ANGLE: 0-180°
- ROW NO: 1-SINGLE ROW
- PIN Q'PY: 02~16
- TERMIPOINT: 1-DIP
- PLATING: A-ALL AU G/F, C-BRIGHE TIN, D-MATTE Tin
- COLOR: A-BLACK, K-WHITE, S-NATURE
- CHARACTERISTIC: 1-PLAY K, 2-NO K

PIN	DIM. (mm)		PIN	DIM. (mm)	
	A	B		A	B
02	7.50	2.50	10	27.50	22.50
03	10.00	5.00	11	30.00	25.00
04	12.50	7.50	12	32.50	27.50
05	15.00	10.00	13	35.00	30.00
06	17.50	12.50	14	37.50	32.50
07	20.00	15.00	15	40.00	35.00
08	22.50	17.50	16	42.50	37.50
09	25.00	20.00			

REV.	REVISION RECORD	DATE
A0	NEW RELEASE	21.01.13

UNIT: mm
SIZE: A4

GENERAL TOLERANCES	
LINEAR	ANGLES
0.0±0.35	X°REF±6°
0.00±0.25	X°±3°
0.000±0.10	X°X' ±2°

SCALE: 1:1	NAME	DATE
APPROVED	Wang_jr	21.01.13
DESIGNER	Han_Gao	21.01.13
DRAWN	Zijun_Huang	21.01.13

PART.NO: A2501F0-1XX1XXX

DWG.NO: ENDE05

TITLE: Pitch 2.50mm 180° XH WAFER

万连科技 WanLian Teconology Co., Ltd

REV: A0

SHEET: 1/2

The product using material and processing must conform to the "WI-PZ-001"HSF technical standard control requirements

ROHS+HF

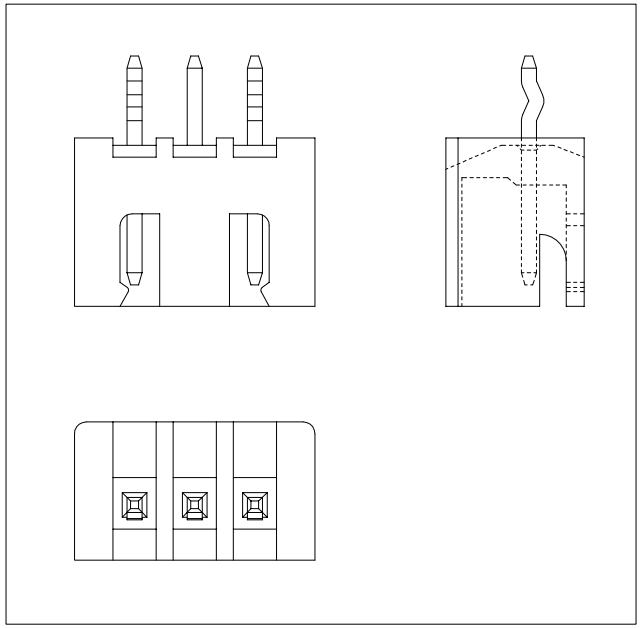

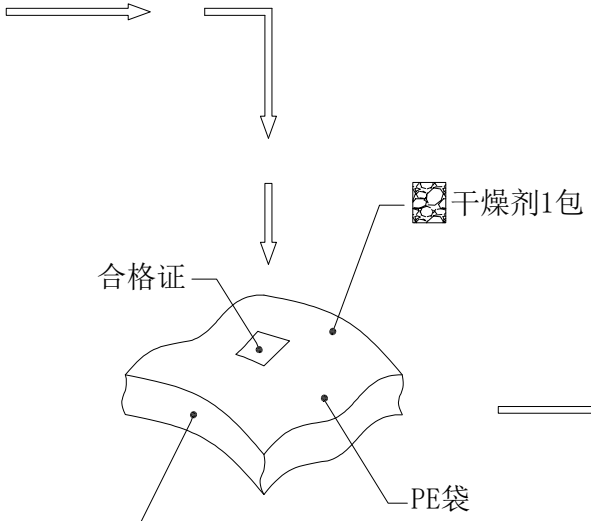

2P-4P 2000/1包
5P-12P 1000/1包
13P-16P 500/1包

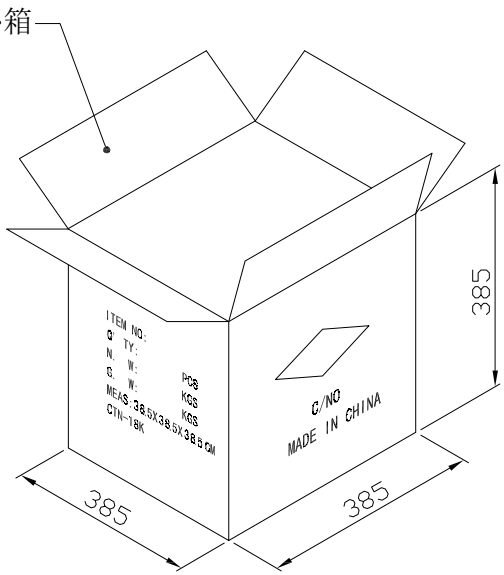

REV.	REVISION RECORD	DATE
A0	NEW RELEASE	21.01.13

UNIT: mm
SIZE: A4

GENERAL TOLERANCES	
LINEAR	ANGLES
0.0±0.35	X°REF±6°
0.00±0.25	X°±3°
0.000±0.10	X°X' ±2°

SCALE: 1:1	NAME	DATE
APPROVED	Wang_jr	21.01.13
DESIGNER	Han_Gao	21.01.13
DRAWN	Zijun_Huang	21.01.13

PART.NO: A2501F0-1XX1XXX

DWG.NO: ENDE05

TITLE: PACKAGE DRAWING

万连科技 WanLian Teconology Co., Ltd

REV: A0 SHEET: 2/2