电子谷
DZGU.COM

SWITCHLAB

https://dzgu.com/

公司简介
COMPANY PROFILE

电子谷是连接器全品类一站式服务平台。平台拥有100万物料产品，覆盖消费类电子、新能源、汽车、智能家居、5G、医疗、航空、工业机器人等多种行业。电子谷凝聚20年连接器研发、制造、服务经验，为用户提供BOM表智能报价、专属FAE支持、来图定制等多种在线服务。致力打造连接器全品类一站式服务平台，实现连接器采购的数字化、高效化。

16万m²生产厂房

超大工业集群，厂区面积超16万+m²，内设行业先进生产设备与技术，为交期提供强有力的生产保障。

扫码VR看厂

16万+m²生产厂房

503+人研发团队

电子谷6S服务

专属客服 FAE支持
FAE Support

专属客服7X24小时服务
FAE工程师在线技术支持

海量库存 闪电发货
Speedy Delivery

自有仓储，海量现货备货
为产品交期提供保障

快捷报价 分秒必争
Swift Quote

智能BOM快速报价，
深度学习引擎秒配50万物料SKU

精益生产 严控品质
Stringent Quality Control

信息化、精益化的
生产流程和完整的品质管理体系

品类齐全 一站采购
One-stop shopping

原厂、国产全品类供应
连接器一站采购，降低采购成本

自有工厂 优势价格
Superior Price

自有工厂加优质供应链
价格优势就在电子谷商城

应用场景
APPLICATION SCENARIO

轨道交通行业
RAIL TRANSIT INDUSTRY

能源行业
ENERGY INDUSTRY

自动化行业
AUTOMATION INDUSTRY

机器人行业
ROBOT INDUSTRY

机械设备行业
MACHINERY INDUSTRY

舞台照明行业
STAGE LIGHTING INDUSTRY

汽车/新能源行业
AUTOMOTIVE/NEW ENERGY INDUSTRY

MA SERIES

MA 系列

Simple Wire Protector Printed Circuit Terminal Blocks 简易经济型PCB端子台

The printed circuit terminal blocks MA series fulfill all basic quality features:

- MA series terminal blocks have between 2 and 24 positions with a 3.50 mm, 5.00 mm, 7.50 mm or 10.00 mm pitch. Moreover, MA series Wire-protection clamps provide the highly precise dimension, cost-effective, fit-for-purpose and compact wring solutions. The simple clamping mechanism reduces the product cost.
- The 2 & 3 pole modular designed terminal blocks can be quickly and easily joined together to produce higher pole number assemblies, however, it depends on the actual situation, for mass quantity, we can supply the One-piece housing product.
- MA series allow screw connections for conductors up to 1.5 mm^2 to be realized without soldering.
- MA series are using brass or copper alloy as the fixture for wire connection, which can make the product be free maintenance, anti-vibration, preventing from screw loosing, outstanding corrosion resistance, and high reliability.
- When the clamping screw is turned, it pushes the Leaf Spring onto the conductor until a secure connection is achieved. The Leaf Spring prevents the screw from the digging into the conductor and damaging individual conductor stands.
- MA series products acquired the approvals of UL, CE, and VDE. MA series ensuring compliance with rigorous quality standards. Our customers also appreciate our dependability, punctual deliveries and outstanding value for money.
- A wide selection of accessories rounds off MA series product range.
- If desired, MA series terminal blocks can also be supplied with individual printing and marking.

DECA offers an excellent and competitive price, modification service for enclosures covering a wide range of material and sizes.

MA系列为简单经济型PCB端子台，有3.50mm，5.00mm，7.50mm or 10.00mm.等等，且提供2-24之间不同的极数供客户选择，本体采用耐高温绝缘材料，MA系列端子台的尺寸精密度高且有尾端易插孔设计，让客户能以较低成本快速组装在印刷电路板上MA系列使用铜合金押线框接线方式，无须维护，耐震动，具防螺丝松脱'且使用可靠度高。MA系列亦可做2P，3P的组合基数，可组合成任何需要的极数，但数量多时可依客户的需要提供一体成型的产品。MA系列产品均通过UL，CE，VDE等认证。客户如有需要的话，MA系列端子台也可提供客户清晰易读的印刷标示服务。

MA SERIES

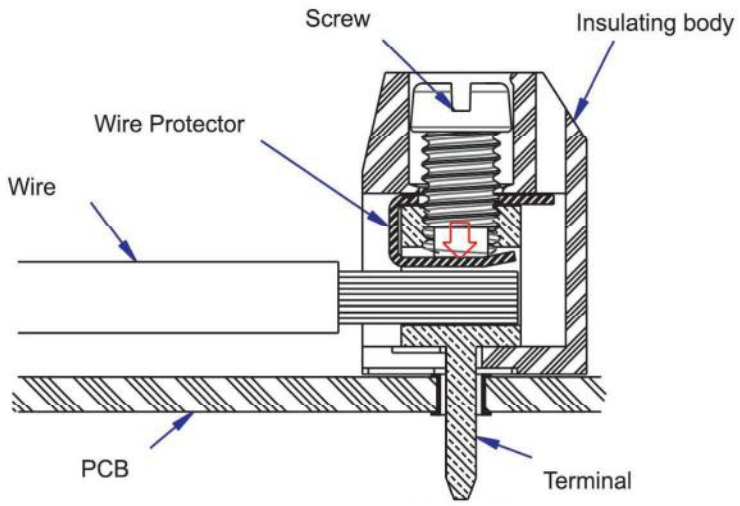

Vertical wire entry

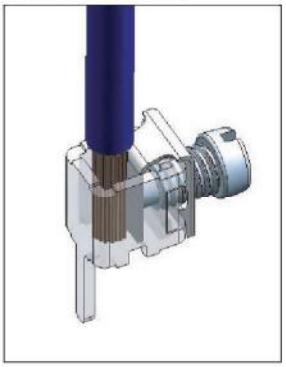

Vertical wire entry

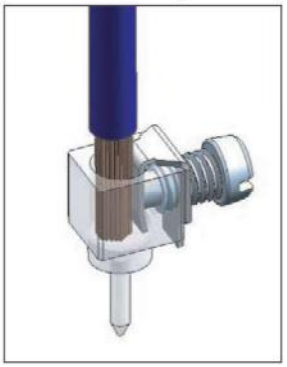

Horizontal wire entry

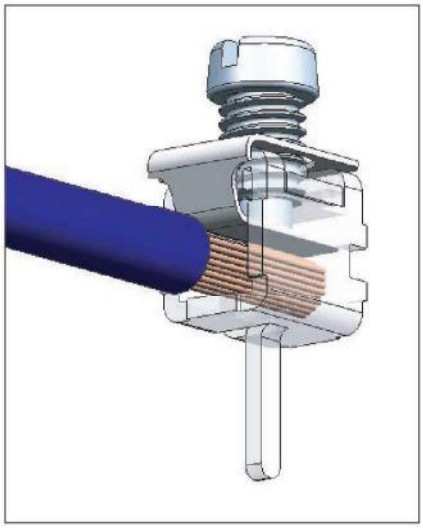

Horizontal wire entry

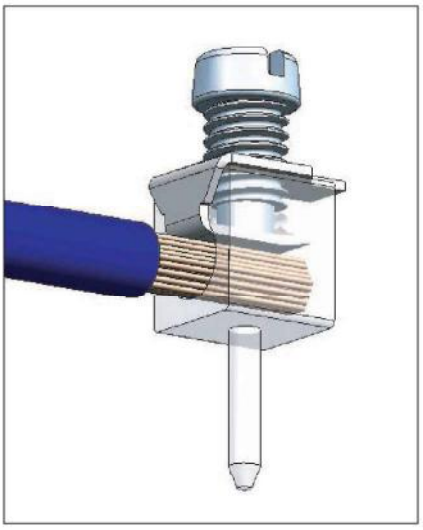

135⁰ wire entry

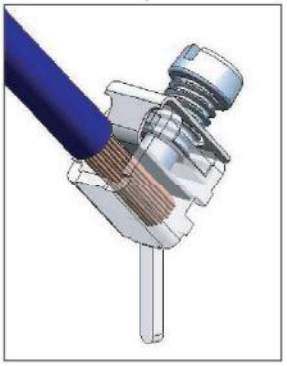

135⁰ wire entry

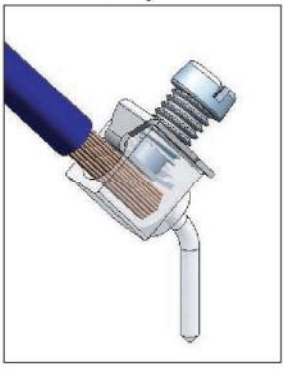

ORDER GUIDE

MA□□ 2- □□□ □□

TYPE	TERMINAL MATERIAL		PITCH		POLES	
MA...	Brass, Tin plated / Horizonal 方脚 / 黄铜镀镍 / 90°	1	3.50mm	350	Modular (模组式) / 2 poles	M02
			3.81mm	381	Modular (模组式) / 3 poles	M03
	Brass, Tin plated / Horizonal 圆脚 / 黄铜镀镍 / 90°	2	5.00mm	500	Single (一体式) / 2 poles	02
			7.50mm	750	Single (一体式) / 3 poles	03
	Brass, Tin plated / Vertical 方脚 / 黄铜镀镍 / 180°	3	10.00mm	100	:	:
					:	:
	Brass, Tin plated / Vertical 圆脚 / 黄铜镀镍 / 180°	4			:	:
					:	:
	Brass, Tin plated / 135° 方脚 / 黄铜镀锡 / 135°	5			:	:
					:	:
					Single (一体式) / 24 poles	24

MB SERIES

MB 系列

Cage Clamp Printed Circuit Terminal Blocks 押線圈式PCB板端子台

MB series printed circuit terminal blocks provide highly reliable screw connections on industrial printed circuit boards. Whether they have one or more levels, straight or angled conductor insertion, all MB series variants share:

- a robust moving cage principle with a generously dimensioned insertion space for conductors up to 2.5 mm^2
- The flat base of the clamping unit ensures that even the thinnest connection leads can be clamped properly. When the clamping screw is turned, DECA clamping yoke rises in the component housing until the thread is firmly held between the current bar and clamping yoke. The stable design of the clamping parts allows the creation of gas-tight connections. This means that the contact conditions can be kept stable over a long time even in aggressive atmospheres.
- MB series allows the terminal screw to be reliably held in place even in the case of vibrations. At the point of maximum permitted torque, the upper thread-overlap of the yoke opens causing a locking action to be exerted on the screw.
- Sturdy housings with an extremely precise pitch. MB series can be easily assembled on the printed circuit board. Customer can take advantage of MB series in time saving, and costs lower.
- The clamping parts and terminal screws are made of high-tensile copper alloy to prevent unreliable electrical contacts and / or jammed screws. The insulation housings are made of a highly temperature-resistant plastic(up to 20^0-25^0C for sec.)
- A wide selection of accessories rounds off MB series product range.
- MB series products acquired the approvals of UL, CE, and VDE. MB series products are extremely suitable for power supply, inverter, …etc. and applied for industrial control and information technique.

MB系列是押线圈式印刷电路板用端子台，提供工业印刷电路板上的高信赖的螺丝连接，含有35°，45°等不同角度进线方向，并配合单层，或是多层（层与层之间错并半个pin针距离，保证较低层pin针位的接线方便和可见度）的设计，让客户在应用上的选择大大提高，MB系列是利用押线圈升降原理保证接线牢靠，甚至是使用最薄的导线都能被适当地夹住，而且在环境较恶劣状况下（例如振动），这种接触状况也能够杂持长时间稳定。MB系列端子台的尺寸精密度高，护客户能以较低成本快速组装MB系列端子台在印刷电路板上，无须维护，耐震动，防螺丝松脱，抗氧性高，且使用信赖性高MB系列均通过UL，CE，VDE等认证。

MB SERIES

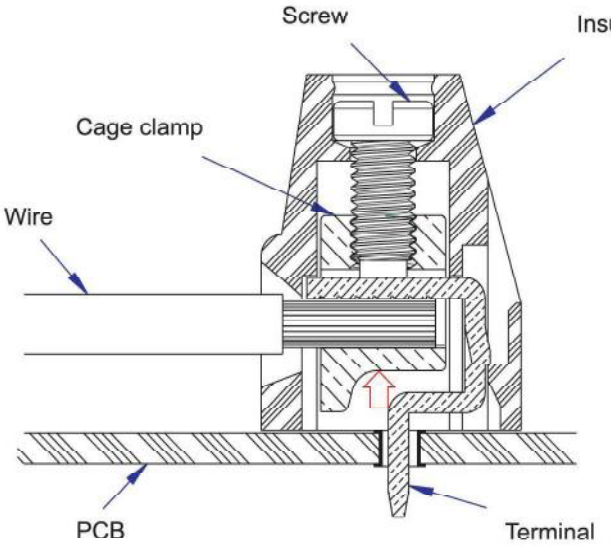

Vertical wire entry

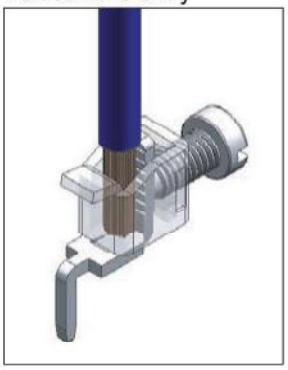

Vertical wire entry

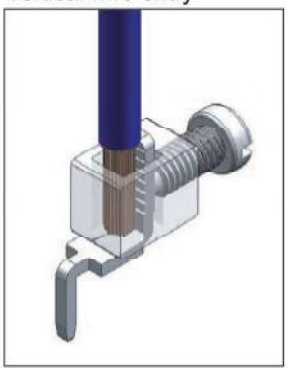

Horizontal wire entry

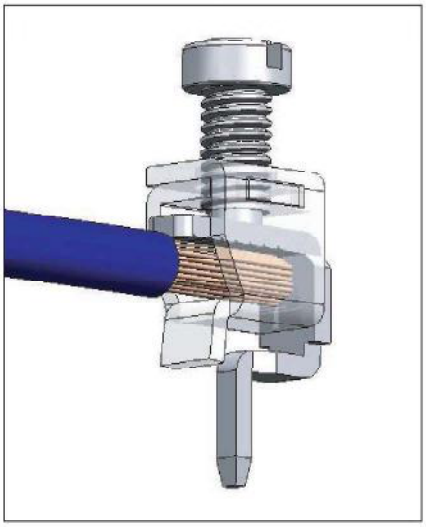

Horizontal wire entry

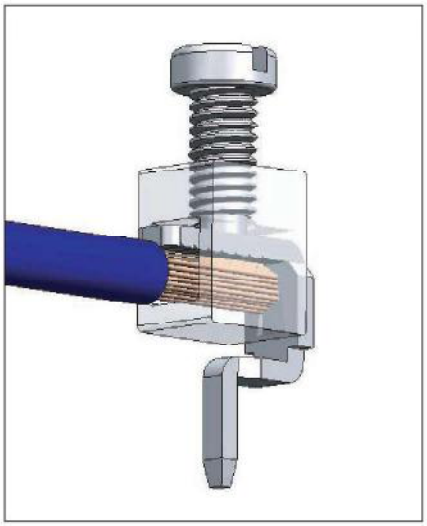

135⁰ wire entry

135⁰ wire entry

ORDER GUIDE

MB□□ 2- □□□ □□

TYPE	TERMINAL MATERIAL		PITCH		POLES	
MB...	Steel, Ni plated (钢镀镍)	0	3.50mm	350	Modular (模组式) / 2 poles	M02
	Brass, Ni plated (黄铜镀镍)	2	3.81mm	381	Modular (模组式) / 3 poles	M03
	Brass, Ni plated (色铜镀镍)	3	5.00mm	500	Single (一体式) / 2 poles	02
			5.08mm	508	Single (一体式) / 3 poles	03
			6.35mm	635	:	:
			7.50mm	750	:	:
			7.62mm	762		
			9.52mm	952	:	:
			10.00mm	100	:	:
			10.16mm	016	Single (一体式) / 24 poles	24

MC SERIES

MC 系列

The Plug Side Of Pluggable Type Terminal Blocks 对插式端子台的接头

MC series is available in horizontal, vertical, and front wire entry designs, to meet multiple design requirements. This series creates applications requiring high reliable interconnection with the flexibility of simplified modifications and installation. MC series provides the screw clamping and spring clamp connections and also extends the customers' choices of higher density connection products from DECA.

MC 100, MC 101 plugs with plug-in direction parallel to the conductor axis are available with a 5.00 mm or 5.08 mm pitch and 2 to 22 positions. The pluggable blocks are available with and without a screw flange, to permit a vibration-resistant connection with the headers.

MC 420, MC421 plugs distribute the height uniformly over the upper and lower sides of the printed circuit board. The distances to adjacent printed circuit boards can be reduced considerably thanks to the low overall height of the module.

MC 200, MC 201 plugs have plug-in direction vertical to the conductors axis. Vertical plugs can be placed immediately against neighbor walls and removed without squashing the connected lines. Alternatively, the pluggable blocks are also available with screw flange. This allows secure fixing of the pluggable blocks to the PCB pin header. The result is additional safety against vibration or faulty handling.

MC 310, MC311 plugs with front screw connection and plug-in direction horizontal to the conductor axis are available for conductor cross-sections of up to 1.5 mm2 with a 5 and 5.08 mm pitch, and 2 to 24 positions.

MC series has a significant reduction in assemble time and wiring complexity, and also includes clear print marking areas for the cross connection.

DECA offers an excellent and competitive price, modification service for enclosures covering a wide range of material and sizes.

MC系列为对插式端子台的接头，提供水平接质，垂直接头，和前方向进线接头等选择来满足客户在设计上不同的需要，多样化的MC系列接头有螺丝及弹簧连接方式和高品质耐高温的外壳特殊设计，金属件为钢合金抗腐蚀性强·容易组装·防螺丝松脱，简化客户接线的复杂性，客户可节省时间和成本，DECA提供完美钠售服务及最佳解决方案·客户如有需要可提供清晰易读的标示服务。

MC101，MC101，MC420，MC421列焉水平接头是与进导体呈平行方向。MC200，MC201系列垂直接头：整排接头安装时，可相互贴紧·节省空间·MC310；MC311系列为前方向进线接头的有前方向的螺丝连接，MC系列接头：接线容量大，可接截面积至1.5mm2的导线，这系列接头也可供客户来选择有或无加固螺丝，加固螺丝可加强MC系列接头和ME系列接座在连接上具有防震功能。

MC SERIES (Plug)

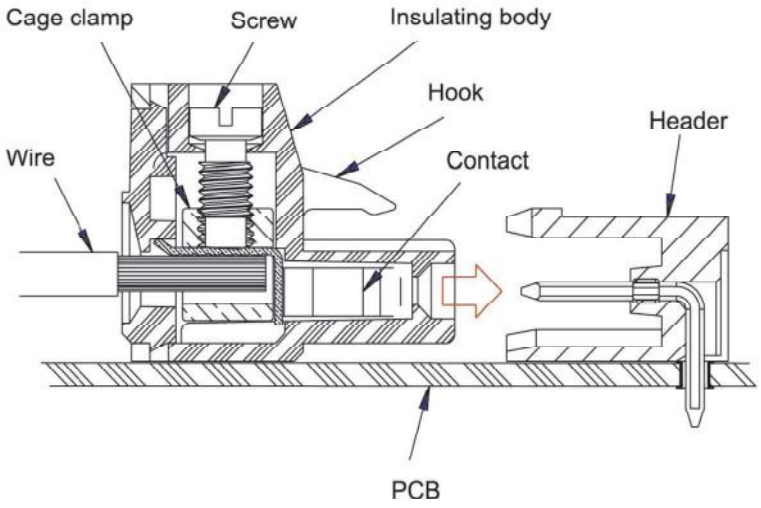

Vertical wire entry

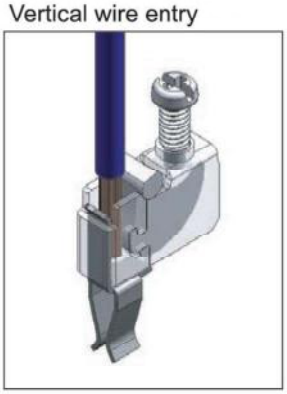

135⁰ wire entry

Vertical wire entry

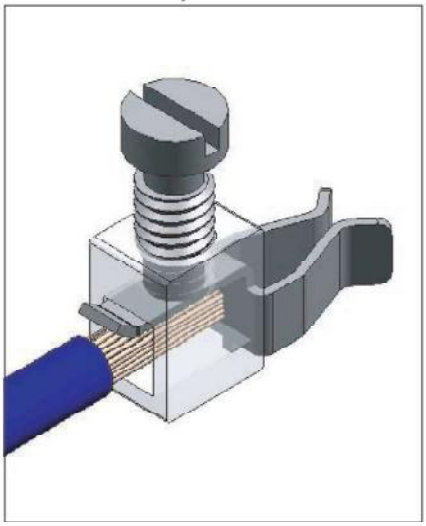

Horizontal wire entry

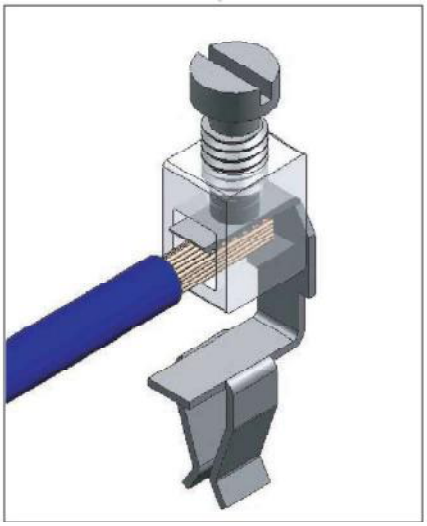

Horizontal wire entry

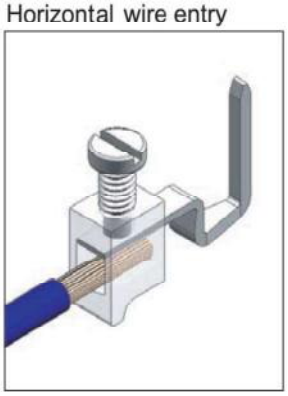

Vertical wire entry

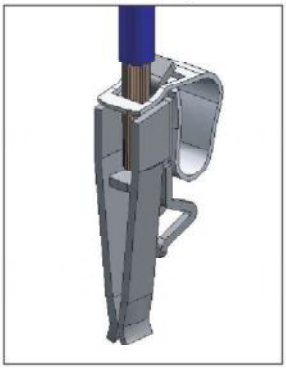

ORDER GUIDE

MC□□ 0-□□□ □□

TYPE	TERMINAL MATERIAL		PITCH		POLES	
MC...	Without flange (无法兰)	0	3.50mm	350	2 poles	02
			3.81mm	381	3 poles	03
	With flange (有法兰)	1	5.00mm	500	:	:
			5.08mm	508	:	:
			7.50mm	750	:	:
			7.62mm	762	:	:
			10.00mm	100	:	:
			10.16mm	016	:	:
					:	:
					24 poles	24

MD SERIES

MD 系列

Composed(Combined) Pluggable Type Terminal Blocks 组合式端子台

MD series terminal blocks by using solder pin always put with other terminal blocks together, have the same structural features as their sister models from MA, MC, and ME.

MD series plungers and headers with straight solder pins are available:

1. With 2 to 24 positions
2. In a 5.00 mm pitch
3. With horizontal and vertical plug-in direction to the printed circuit board.
4. The insulation housings were made of high-temperature-resistant plastic.
5. With an extremely precise pitch, The current pins are made from a tin plated copper alloy.
6. Easily assembled on the printed circuit board. Customer can take advantage of MD series in time saving, and costs lower

DECA supplies your terminal assemblies with all the individual components you need. We also offer protection from undesirable external influences, keeping the elements at bay by providing the right coating for each application.

MD系列为粗合式端子台，利用焊针与端子粗合介于MA，MC，和ME的共享。有2-24之间不同极数间距是在500mm供客户选择，且有绝佳耐高温外壳保护，DECA子台尺寸精密：容易快速组装让客户能够节省时间。MD系列组合式端子台外壳有特殊防护设计·防腐蚀'耐高温，防震动与螺丝松脱·不管是端子台的部份组装或是不同色、的选择。MD系列粗合式端子台都能针对客户的特别需要而量身订做。

MD SERIES

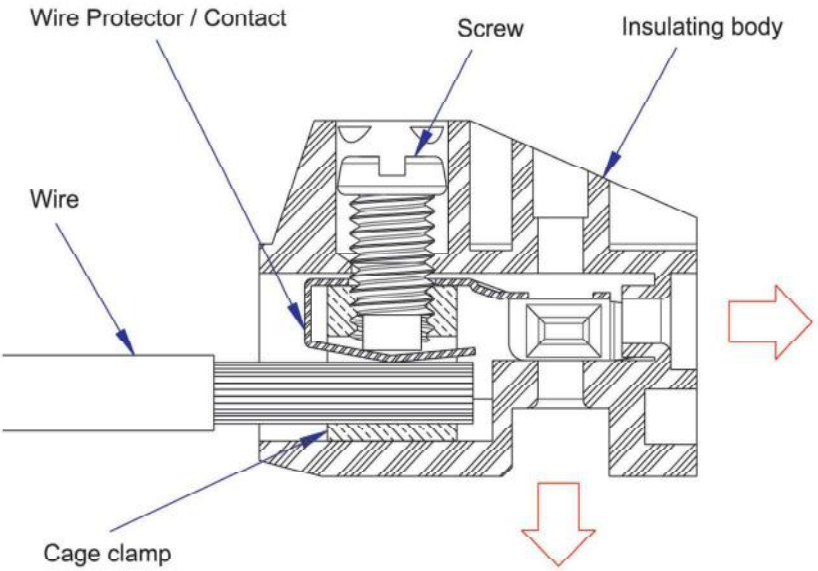

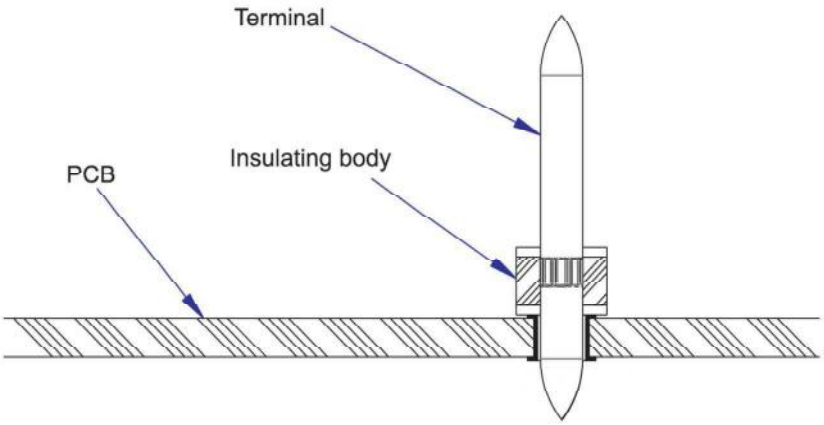

Horizontal wire entry

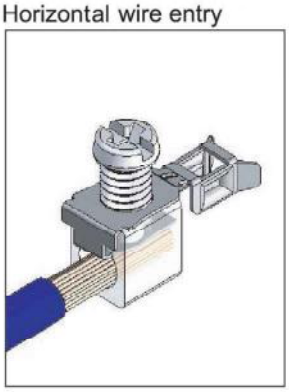

Vertical wire entry

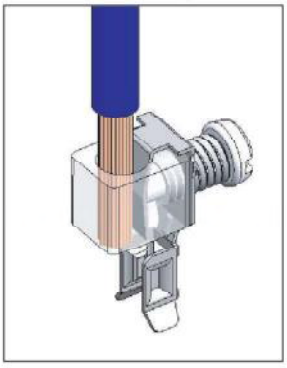

Vertical connector

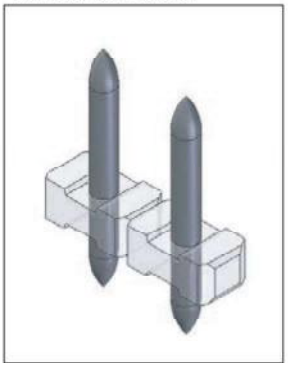

Horizontal connector

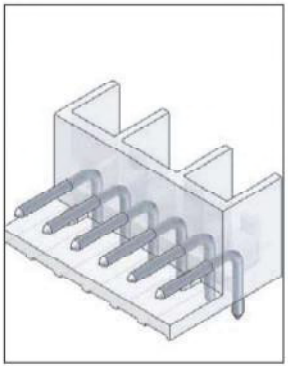

ORDER GUIDE

MD□□ 2-□□□ □□

TYPE	TERMINAL MATERIAL		PITCH		POLES	
MD...	Steel, Ni pleted (刚镀镍)	0	3.50mm	350	Modular (模组式) / 2 poles	M02
	Brass, Ni plated (黄铜镀镍)	2	5.00mm	500	Modular (模组式) / 3 poles	M03
			10.00mm	100	Single (一体式) / 2 poles	02
					:	:
					:	:
					:	:
					:	:
					:	:
					:	:
					Single (一体式) / 6 poles	06

ME SERIES

ME 系列

The Header Side Of Pluggable Type Terminal Blocks 对插式端子台的插座

ME 030, ME 040, ME 050, ME 060 headers with vertical and horizontal plug-in direction are available with 2 to 22 positions. The header coding section is simply inserted in the corresponding slot.

DECA ME headers have open-ended or with panels. The open-end version can be mounted in rows according to the pitch. There is no danger of lateral mismating in the versions with side panels. DECA ME headers can have threaded flange for vibration-resistant connection with the plugs with screw flange.

ME 110, ME130, ME13L, ME13R, ME150, ME210, ME230, ME23L, ME23R, ME250 with double level headers (pitch 5 or 5.08mm) in horizontal design. The prime advantage of a double-level ME series headers is the relative saving of printed circuit board surface space. Extended constructions with more positions can be created by mounting headers with flange or closed side panels to the right and to the left of the standard housing.

ME 120, ME140, ME14L, ME14R, ME160, ME220, ME240, ME24L, ME260 with double level headers (pitch 5 or 5.08mm) in vertical design. As a result of modular "building block" system of 2 and 3-position double level blocks, any number of positions from 2 to 24, can be obtained by simple interlocking, with or without flange. Extended constructions with more positions can be created by mounting headers with flange or closed side panels to the right and to the left of the standard housing.

DECA supplies your terminal assemblies with all the individual components you need. We also offer protection from undesirable external influences, keeping the elements at bay by providing the right coating for each application. Using a combination of special high temperature resistant plastic and innovative component design, ME series pin-headers and PCB terminal blocks that can be 100% incorporated into the automatic printed circuit boards assembly process. ME series also aid the reduction of overall production costs thus improving manufacturing efficiency.

ME030，ME040，ME050，ME060系列插座提供垂直和水平两个方向。
ME 110，ME130，ME13L，ME13R，ME150 MF210 ME230，ME23L，ME23R，ME250系列水平插座提供双屉式的规格，更高密度及节省PCB板上空间使用。ME120，ME140，ME140，ME14L,ME12R,ME160,ME220,ME240,ME24L,ME260系列为垂直插座提供双层式的规格，更高密度及省PCB板上空间使用。
ME系列对插式D子台有开放和封开式镶板可供客户选择，且ME系列插座可以提供具有防震功能的加固螺丝来与MC插头连接，绝缘外壳牢耐用，镀锡焊针易于焊接，装配简便，节省配线时间。

ME SERIES (header)

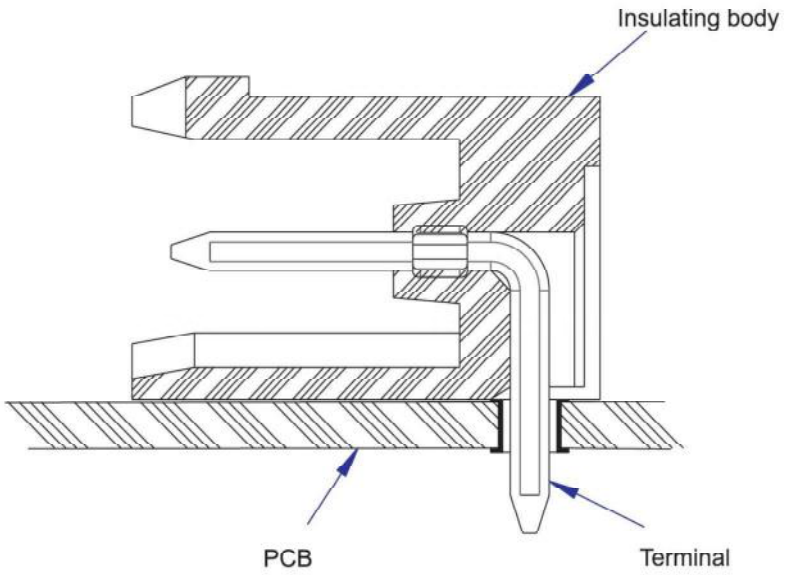

Single-level
Horizontal connector

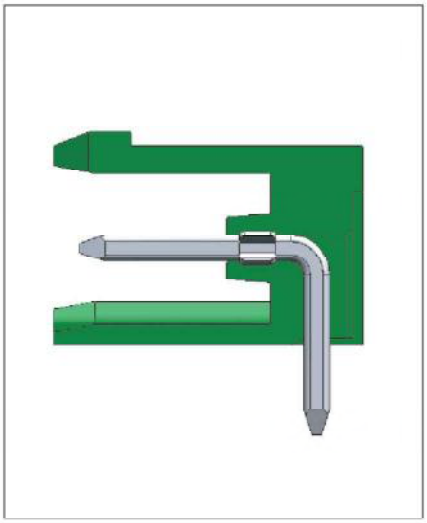

Single-level
Vertical connector

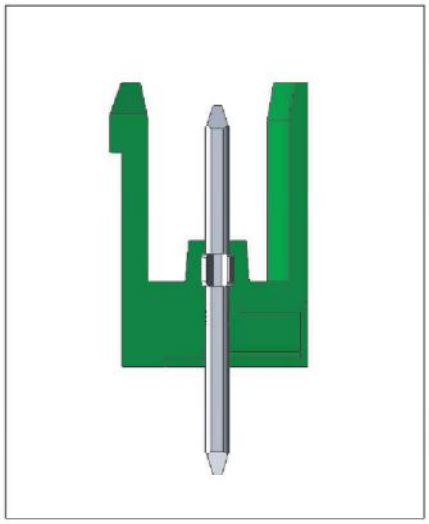

Single-level
135⁰ connector

Double-level
Horizontal connector

Double-level
Vertical connector

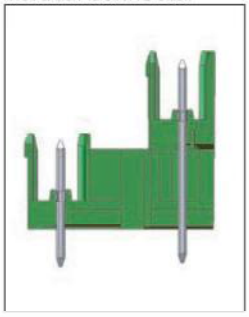

Double-level
Horizontal connector

Horizontal /Vertical
connector

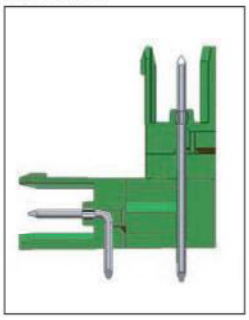

ORDER GUIDE

ME□□ 2- □□□ □□

TYPE	BODY		MODEL		PITCH		POLES	
ME...	Open / Horizonal (开放 / 90°)	1	Singe (一体)	O	3.50mm	350	Modular (模组式) / 2 poles	M02
	Open / Vertical (开放 / 180°)	2	Left (左边)	L	3.81mm	381	Modular (模组式) / 3 poles	M03
	Closed / Horizonal (封闭 / 90°)	3	Right (右边)	R	5.00mm	500	Single (一体式) / 2 poles	02
	Closed / Vertical (封闭 / 180°)	4			5.08mm	508	Single (一体式) / 3 poles	03
	Flange / Horizonal (法兰 / 90°)	5			7.50mm	750	:	:
	Flange / Vertical (法兰 / 180°)	6			7.62mm	762	:	:
					10.00mm	100	:	:
					10.16mm	016	:	:
							Single (一体式) / 24 poles	24

MX SERIES

MX 系列

Printed circuit spring terminal blocks 弹片式PCB端子台

The advantage of using spiral spring technology is that the conductor can be connected quickly without special tools. MX series provides simple operation reducing the wiring times. This spacing saving and cost-effectiveness are two of the most important application design criteria for today users.

The solid conductor or a fine-strand conductor with ferrule is simply inserted into the terminal point and pressed against the current bar by the spiral spring. The wire can be removed easily just pressing down the clamp with a screwdriver.

High density and compact design enable MX series to be used in the field of telecommunication system, lighting system, security system, and wire arrangement of architectures.

MX series provides contact safety:

* A Stainless steel spring ensures that the necessary contact force is permanently present between the conductor and the conductor rail. Relatively high conductor extraction force in comparison to wire protector terminal blocks.
* The copper conductor rails with tin alloy provide an excellent fit to the conductor. This ensures a very low voltage drop.

The basic range includes variants for horizontal, vertical and angled cable exists in different pitch steps from 3.50 mm to 10.16 mm. The 2 to 24 positions can be labeled individually.

Two measures protect the soldered connections and the printed conductors from dangerous force effects during operation:

1. The reliable anchoring of the termination blocks in the printed circuit board through the multi-pin soldering.
2. The clear force reduction by the opening level when conductors are connected or disconnected. Spring travel is restricted by means of a spring limit stop (protection of the compression spring).

DECA offers an excellent and competitive price, modification service for enclosures covering a wide range of material and sizes.

MX系列为弹片式PCB端子台,提供254MM，3.50MM，5.00MM，5.08MM，7.62MM及10.16MM等不同间距和2-24之间的不同极数供客户选择，不需要特殊工具就能快速接线，适用于单蕊线，多股线...等多种接线方式'退线时只要以一只螺丝起子压下 即可轻易将电线取出，MX系列产品均通过UL·CE·VDE等认证，本系列产品极适合在通信系统，照明与保全系统，及建筑物的布线使用上。

登录后查看
完整版
目录书