RoHS

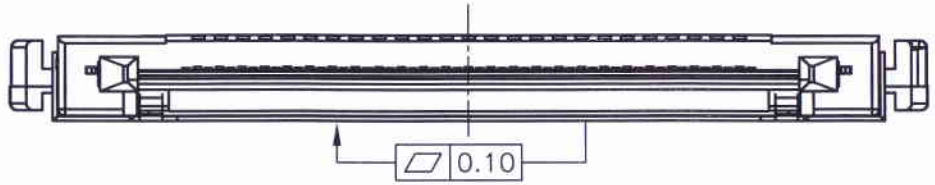

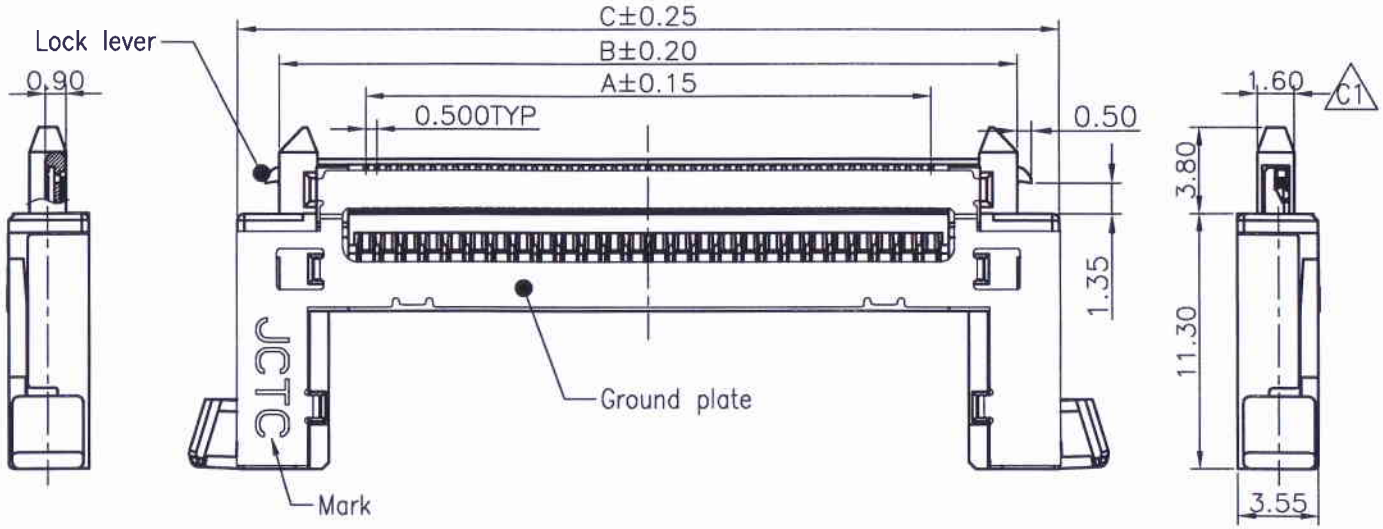

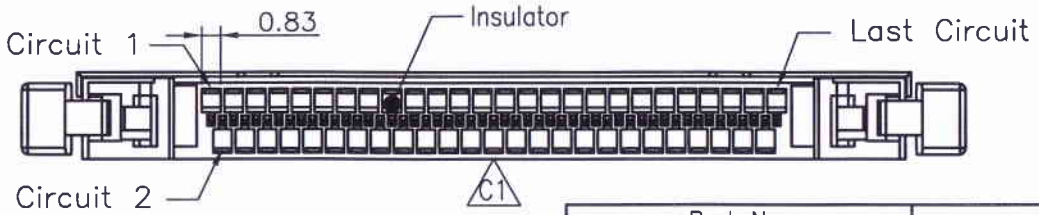

10500H00-NP-B-LP-NK
① ② ③ ④ ⑤ ⑥

① Series No.
② H90 : Side Contact
H00 : Up Contact
③ No. of Circuits
④ B : Mount type
⑤ Material: LP : LCP,UL 94V-0
⑥ Blank : With Mark
NK : Without Mark

Specifications:
Rated Voltage : 200V AC/DC
Rated Current : 0.7A AC,DC
Withstand Voltage : 500V AC/minute
Contact Resistance : 30mΩ(MAX.)
Insulation Resistance : 100MΩ(MIN.)
Temperature Range : -40°C~+85°C

Dimensional Ordering Infarmation:

Circuits	Part No	Dimensions		
		A	B	C
21	21P	10.00	17.60	21.25
31	31P	15.00	22.60	26.25
41	41P	20.00	27.60	31.25
51	51P	25.00	32.60	36.25

Suitable for JCTC 10500 series terminal

Part No.	Insulator	Color	Ground plate	Lock lever
10500H00-NP-B-LP	High temperature plastic,UL94V-0	Black	Stainless	Stainless
10500H00-NP-B1-LP	High temperature plastic,UL94V-0	Black	Stainless	Stainless
10500H00-NP-B-LP-NK	High temperature plastic,UL94V-0	Black	Stainless	Stainless

胜蓝科技股份有限公司
2017.03.21
工程部
技术文件发行章

REV.	REVISION RECORD	DATE
C0	新图面发行	10.06.10
C1	HR1009040076	10.09.04
C2	新增镀可焊镍规格	12.11.21
C3	变更公司名称	17.03.20

UNIT: MM
SIZE: A4

GENERAL TOLERANCES	
LINEAR	ANGLES
0.0±0.25	X° REF±6°
0.00±0.15	X° ±3°
0.000±0.08	X° X' ±2°

SCALE: 1:1	NAME	DATE
APPROVED		
DESIGNER		17.03.20
DRAWN	卢小锋	17.03.20

JCTC® 胜蓝科技股份有限公司
TERMINAL&CONNECTORS 东莞市富智达电子科技有限公司

TITLE: FI-RE 0.50mm PITCH CONN

PART. NO: 10500H00-NP-BX-XX-XX
DWG. NO: ENDE05
REV: C3
SHEET: 1/1