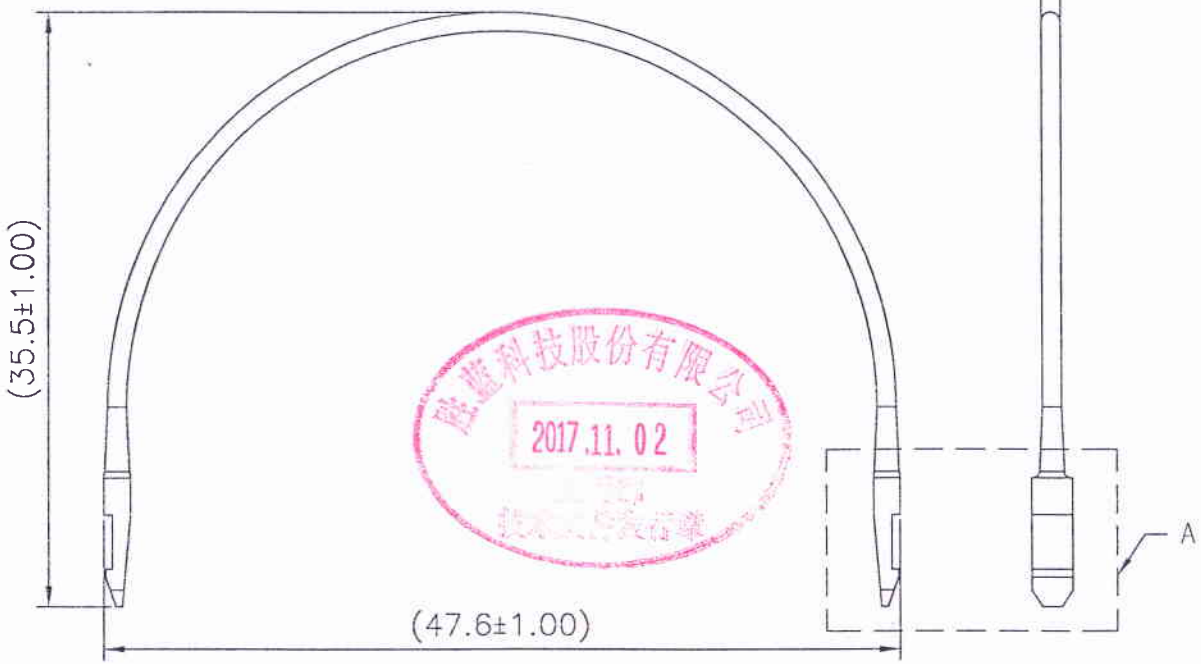

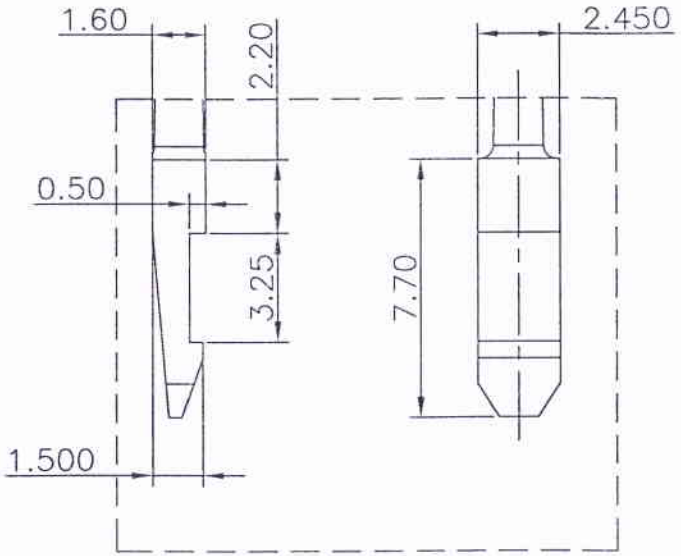

DETAIL A
SCALE: 2:1

胜蓝科技股份有限公司
2017.11.02

The product using material and processing must conform to the "WI-PZ-142"HSF technical standard control requirements

Part No.	Material	Color
12012C00-B-HF	Nylon 66,UL94V-0	Black
12012C00-BG-HF	Nylon 66,UL94V-0	Blue

REV.	REVISION RECORD	DATE
C0	新图面发行	13.10.22
C1	依开发单170626131增加规格	17.06.27
C2	依HN1710230154设变	17.10.25

GENERAL TOLERANCES	
LINEAR	ANGLES
0.0±0.25	X° REF±6°
0.00±0.15	X° ±3°
0.000±0.08	X° X'±2°

UNIT: MM
SIZE: A4

	NAME	DATE
SCALE: 1:1		
APPROVED		26/10
DESIGNER	王文敏	17.10.25
DRAWN	伍文聪	17.06.27

JCTC® 胜蓝科技股份有限公司
TERMINAL&CONNECTORS 东莞市富智达电子科技有限公司

TITLE: 2.00mm PITCH HOUSING -- 配件

PART. NO: 12012C00-B-HF
DWG. NO: ENDE05
REV: C2
SHEET: 1/1