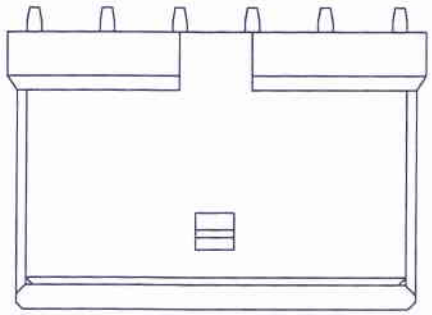

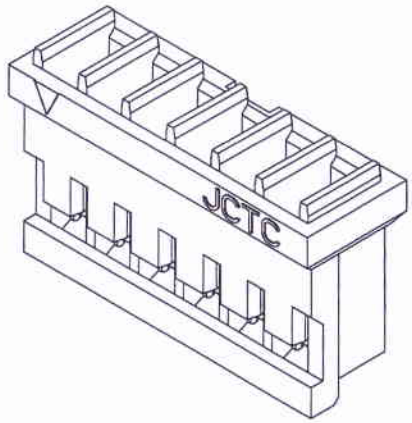

Specifications:
Rated Voltage : 250V AC/DC
Rated Current : 3A AC,DC
Withstand Voltage : 500V AC/minute
Contact Resistance : 20mΩ(MAX.)
Insulation Resistance : 1000MΩ(MIN.)
Temperature Range : −25°C~+85°C
The product using material and processing must conform to the "WI-PZ-142"HSF technical standard control requirements

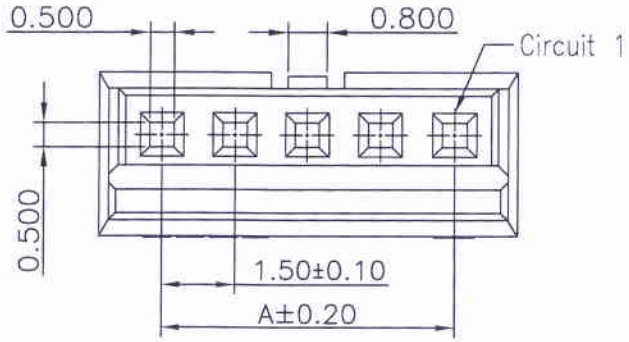

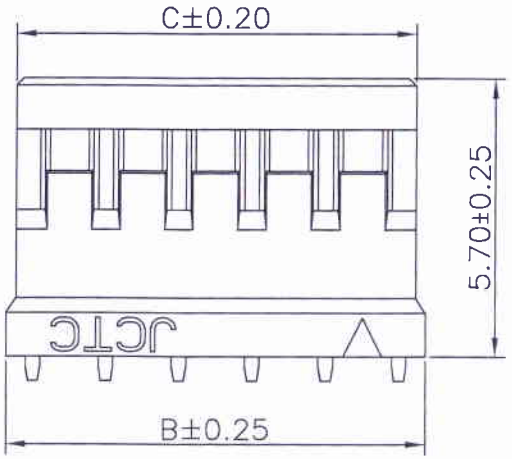

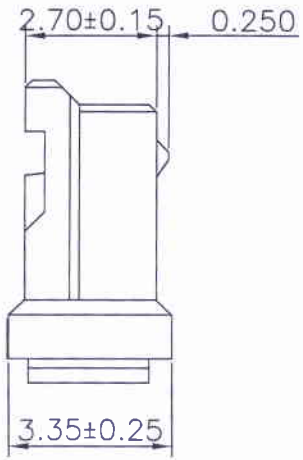

Part No	A	B	C
2P	--	4.10	3.70
3P	3.00	5.60	5.20
4P	4.50	7.10	6.70
5P	6.00	8.60	8.20
6P	7.50	10.10	9.70
7P	9.00	11.60	11.20
8P	10.50	13.10	12.70
9P	12.00	14.60	14.20
10P	13.50	16.10	15.70
11P	15.00	17.60	17.20
12P	16.50	19.10	18.70
13P	18.00	20.60	20.20
14P	19.50	22.10	21.70
15P	21.00	23.60	23.20

11500H00-NP X
① ② ③ ④

① Series No.
② H90 : Side Contact
H00 : Up Contact
③ No. of Circuits
④ A : Product color(A--Y)
Blank : Natural type

胜蓝科技股份有限公司
2020.08.17
工程部
技术文件发行章

Suitable for JCTC 11500 series terminal

Part No.	Material	Color
11500H00-NP	Nylon 66,UL 94V-0	Natural(White)
11500H00-NPA	Nylon 66,UL 94V-0	Black

REV.	REVISION RECORD	DATE
C1	新增黑色规格	12.05.02
C2	卡点高度改为0.25mm	12.12.03
C3	更新公司名称	17.06.27
C4	换图框发行	20.08.12

GENERAL TOLERANCES

LINEAR	ANGLES
0.0±0.25	X° REF±6°
0.00±0.15	X° ±3°
0.000±0.08	X° X'±2°

UNIT: MM
SIZE: A4

SCALE: 1:1	NAME	DATE
APPROVED		2020.08.12
DESIGNER		20.08.12
DRAWN	张振坤	20.08.12

PART. NO: 11500H00-NPX
DWG. NO: ENDE05
TITLE: Molex 1.50mm PITCH HOUSING

JCTC® TERMINAL&CONNECTORS

REV: C4
SHEET: 1/1