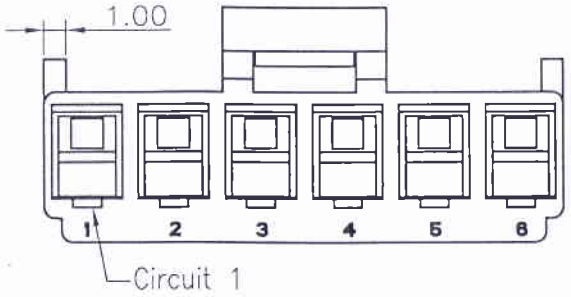

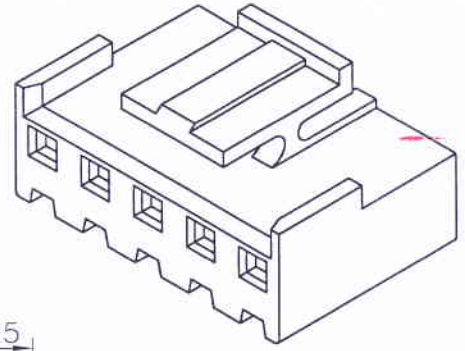

SPECIFICATIONS
Current Rating: 7A AC,DC
Voltage Rating: 250V AC,DC
Temperature Range: −25°C ~ +85°C
Contact Resistance: 10mΩ Max.
Insulation Resistance: 1000MΩ Min.
Withstanding Voltage: 1500V AC/minute

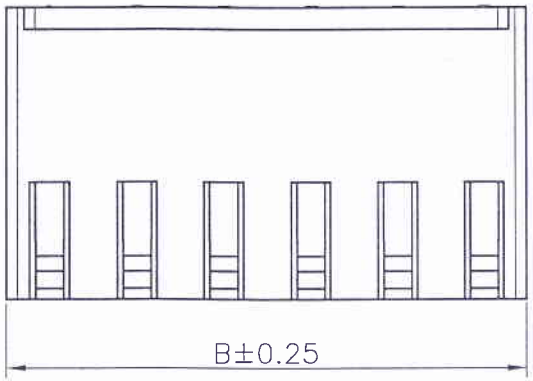

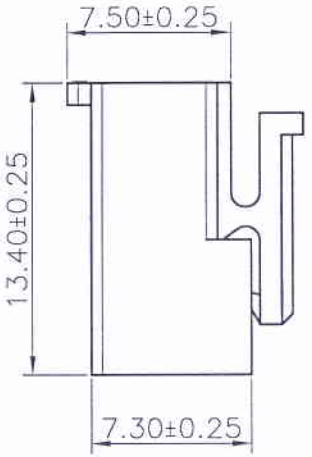

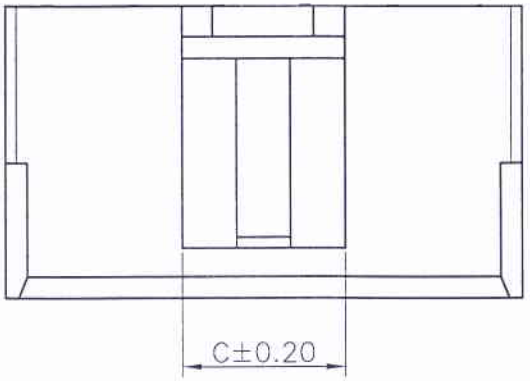

Circuit No.	Dimensions A	B	C
2P	--	7.86	3.60
3P	7.92	11.82	7.60
4P	11.88	15.78	
5P	15.84	19.74	
6P	19.80	23.70	
7P	23.76	27.66	
8P	27.72	31.62	
9P	31.68	35.58	
10P	35.64	39.54	
11P	39.60	43.50	
12P	43.56	47.46	
13P	47.52	51.42	
14P	51.48	55.38	
15P	55.44	59.34	
16P	59.40	63.30	

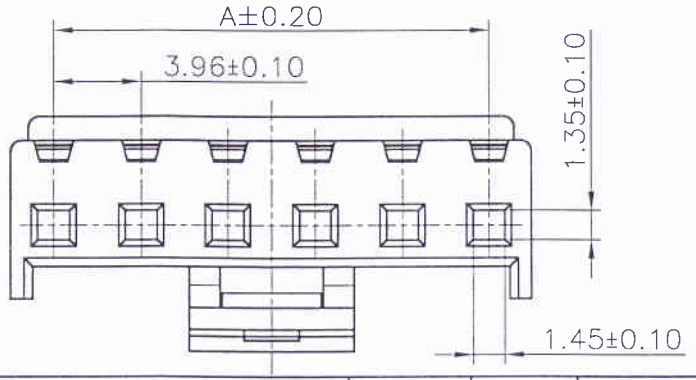

13962H00−NPX−HF−NK
① ② ③④ ⑤ ⑥

① Series No.
② H90 : Side Contact
H00 : Up Contact
③ No. of Circuits
④ A : Product color(A--Y)
Blank: Natural type
⑤ HF: Halogen Free
⑥ NK:NO Mark

胜蓝科技股份有限公司
2018.08.20
工程部
技术文件发行章

Suitable for JCTC 13962 series terminal

Part No.	Material	Color
13962H00-NPA-HF-NK	Nylon 66,UL94V-0	Black

REV.	REVISION RECORD	DATE
C0	新图面发行	14.04.10
C1	变更公司名称	18.08.14

GENERAL TOLERANCES	
LINEAR	ANGLES
0.0±0.25	X° REF±6°
0.00±0.15	X° ±3°
0.000±0.08	X° X'±2°

UNIT: MM
SIZE: A4

SCALE: 1:1	NAME	DATE
APPROVED		
DESIGNER		18.08.18
DRAWN	任文聪	18.08.14

JCTC® 胜蓝科技股份有限公司
TERMINAL&CONNECTORS 东莞市富智达电子科技有限公司

TITLE: VH 3.96mm PITCH HOUSING

PART.NO: 13962H00-NPX-HF-NK
DWG.NO: ENDE05
REV: C1
SHEET: 1/1